Lectures notes

On

Mechanics of Solids

Course Code- MEPC2001

SYLLABUS

Module – I

1. Definition of stress, stress tensor, normal and shear stresses in axially loaded members.

Stress & Strain :- Stress-strain relationship, Hooke's law, Poisson's ratio, shear stress, shear strain, modulus of rigidity. Relationship between material properties of

isotropic materials. Stress-strain diagram for uniaxial loading of ductile and brittle materials. Introduction to mechanical properties of metals-hardness,impact.

Composite Bars In Tension & Compression:-Temperature stresses in composite rods – statically indeterminate problem. (10)

Module – II

2. **Two Dimensional State of Stress and Strain**: Principal stresses, principal strains and principal axes, calculation of principal stresses from principal strains.Stresses in thin cylinder and thin spherical shells under internal pressure , wire winding of thin cylinders.
3. **Torsion** of solid circular shafts, twisting moment, strength of solid and hollow circular shafts and strength of shafts in combined bending and twisting. (10)

Module – III

4. **Shear Force And Bending Moment Diagram**: For simple beams, support reactions for statically determinant beams, relationship between bending moment and shear force, shear force and bending moment diagrams.
5. **Pure bending** theory of initially straight beams, distribution of normal and shear stress, beams of two materials.
6. Deflection of beams by integration method and area moment method. (12) **Module – IV**
7. Closed coiled helical springs.
8. **Buckling of columns :** Euler's theory of initially straight columns with various end conditions, Eccentric loading of columns. Columns with initial curvature. (8) **Text Books-:**

1. Strength of materials by G. H. Ryder, Mc Millan India Ltd.,
2. Elements of Strength of Materials by S.P. Timoshenko and D.H. Young, East West Press Pvt. Ltd.,

Ref. Books:-

1. Introduction to solid mechanics by H. Shames, Prentice Hall India, New Delhi 2. Engineering mechanics of solid by E. P. Popov, Prentice Hall India, New Delhi

3. Engineering Physical Metallurgy, by Y. Lakhtin, MIR pub, Moscow.

Contents

Module No	Lecture No	Title
Module 1	Lecture 1	**Introduction**: Definition of stress, stress tensor, normal and shear stresses in axially loaded members.
	Lecture 2	Numerical problems on stress, shear stress in axially loaded members.
	Lecture 3	**Stress & Strain** :- Stress-strain relationship, Hooke's law, Poisson's ratio, shear stress,
	Lecture 4	Numerical problems on Stress-strain relationship, Hooke's law, Poisson's ratio, shear stress

	Lecture 5	Shear strain, modulus of rigidity, bulk modulus. Relationship between material properties of isotropic materials.
	Lecture 6	Numerical problems on shear strain, modulus of rigidity
	Lecture 7	Stress-strain diagram for uniaxial loading of ductile and brittle materials.
	Lecture 8	Introduction to mechanical properties of metalshardness, impact
	Lecture 9	**Composite Bars In Tension & Compression**:Temperature stresses in composite rods statically indeterminate problem.
	Lecture 10	Numerical problems on composite bars and temperature stress.
Module 2	Lecture 1	**Two Dimensional State of Stress and Strain**: Principal stresses. Numerical examples
	Lecture 2	.Numerical examples on calculation of principal stresses.

	Lecture 3	Mohr's circle method and numerical examples.
	Lecture 4	Principal strain calculation and numerical examples
	Lecture 5	Calculation of principal stresses from principal strains
	Lecture 6	Thin cylinder and thin spherical shells under internal pressure and numerical examples
	Lecture 7	Wire winding of thin cylinders. Numerical examples.
	Lecture 8	**Torsion** of solid circular shafts, twisting moment. Numerical examples
	Lecture 9	Strength of solid and hollow circular shafts. Numerical examples.
	Lecture 10	Strength of shafts in combined bending and twisting. Numerical examples.

Module 3	Lecture 1	**Shear Force And Bending Moment Diagram**: For simple beams, support reactions for statically determinant beams, relationship between bending moment and shear force.
	Lecture 2	Calculation of SF and BM of cantilever beam, simply supported beam and shear force and bending moment diagrams
	Lecture 3	Calculation of SF and BM of overhanging beams. Point of contra flexure, maximum bending moment.
	Lecture 4	Numerical examples on calculation of SF and BM of overhanging beams
	Lecture 5	**Pure bending** theory of initially straight beams,
	Lecture 6	Numerical examples on pure bending
	Lecture 7	Distribution of normal and shear stresses in beams of two materials.
	Lecture 8	Numerical examples on calculation of normal and shear stresses in beams of two materials.
	Lecture 9	Deflection of beams by integration method
	Lecture 10	Numerical examples on deflection of beams by integration method
	Lecture 11	Deflection in beams by moment area method
	Lecture 12	Numerical examples on deflection of beams by moment area method
Module 4	Lecture 1	**Closed coiled helical springs**: Axial load, axial torque, strain energy in spring, numerical examples.
	Lecture 2	Spring under impact loading and numerical examples.
	Lecture 3	Springs in series and numerical examples
	Lecture 4	Springs in parallel and numerical examples.

	Lecture 5	**Buckling of columns :** Euler's theory of initially straight columns with various end conditions- Column hinged at both ends, Column fixed at both ends, numerical examples
	Lecture 6	Column fixed at one end and hinged at other end, Column fixed at one end and free at other end numerical examples.
	Lecture 7	Eccentric loading of columns. Columns with initial curvature
	Lecture 8	Numerical examples on Eccentric loading of columns.

Module 1

Lecture 1

Stress

Stress is the internal resistance offered by the body to the external load applied to it per unit cross sectional area. Stresses are normal to the plane to which they act and are tensile or compressive in nature.

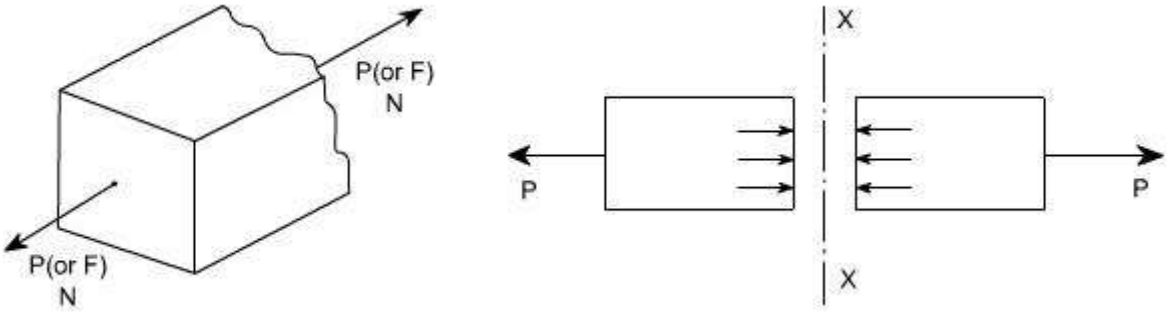

As we know that in mechanics of deformable solids, externally applied forces acts on a body and body suffers a deformation. From equilibrium point of view, this action should be opposed or reacted by internal forces which are set up within the particles of material due to cohesion. These internal forces give rise to a concept of stress. Consider a rectangular rod subjected to axial pull P. Let us imagine that the same rectangular bar is assumed to be cut into two halves at section *XX*. The each portion of this rectangular bar is in equilibrium under the action of load P and the internal forces acting at the section *XX* has been shown.

Now stress is defined as the force intensity or force per unit area. Here we use a symbol □ to represent the stress.

$$\square\square = \frac{P}{A}$$

Where A is the area of the *X –X* section

Here we are using an assumption that the total force or total load carried by the rectangular bar is uniformly distributed over its cross – section. But the stress

distributions may be for from uniform, with local regions of high stress known as stress concentrations. If the force carried by a component is not uniformly distributed over its cross – sectional area, A, we must consider a small area, 'δA' which carries a small load 'δP', of the total force 'P', Then definition of stress is

$$\sigma = \frac{\delta F}{\delta A}$$

As a particular stress generally holds true only at a point, therefore it is defined mathematically as

$$\sigma = \lim_{\delta A \to 0} \frac{\delta F}{\delta A}$$

Units :

The basic units of stress in S.I units i.e. (International system) are N / m^2 (or Pa)

MPa = 10^6 Pa

GPa = 10^9 Pa

KPa = 10^3 Pa

Sometimes N / mm^2 units are also used, because this is an equivalent to MPa. While US customary unit is pound per square inch psi.

TYPES OF STRESSES : Only two basic stresses exists : (1) normal stress and (2) shear stress. Other stresses either are similar to these basic stresses or are a combination of this e.g. bending stress is a combination tensile, compressive and shear stresses. Torsional stress, as encountered in twisting of a shaft is a shearing stress. Let us define the normal stresses and shear stresses in the following sections.

Normal stresses : We have defined stress as force per unit area. If the stresses are normal to the areas concerned, then these are termed as normal stresses. The normal stresses are generally denoted by a Greek letter (σ)

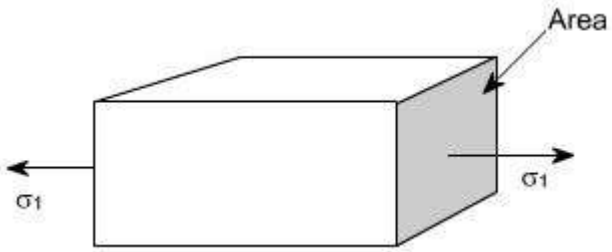

This is also known as uniaxial state of stress, because the stresses acts only in one direction however, such a state rarely exists, therefore we have biaxial and triaxial state of stresses where either the two mutually perpendicular normal stresses acts or three mutually perpendicular normal stresses acts as shown in the figures below :

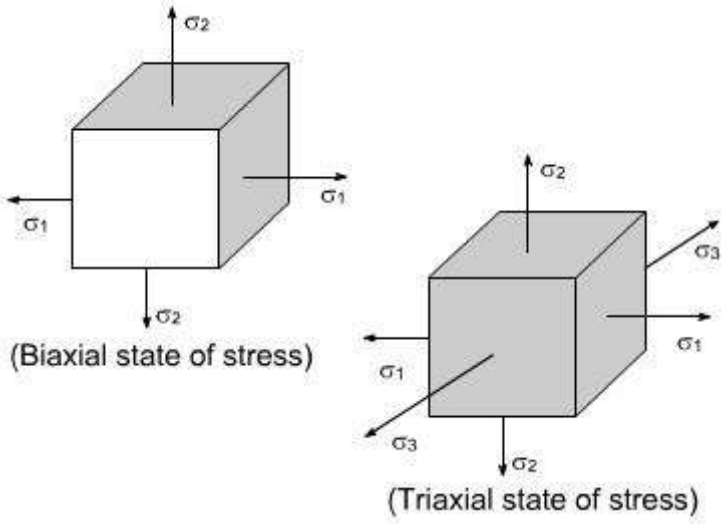

Tensile or compressive Stresses:

The normal stresses can be either tensile or compressive whether the stresses acts out of the area or into the area

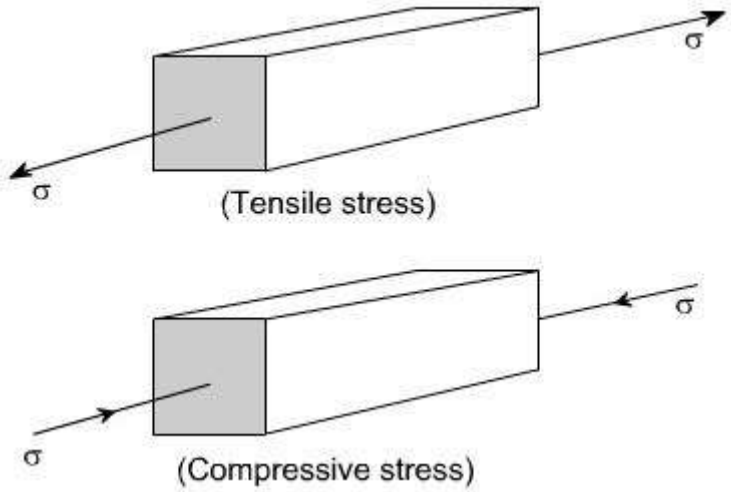

Bearing Stress: When one object presses against another, it is referred to a bearing stress (They are in fact the compressive stresses).

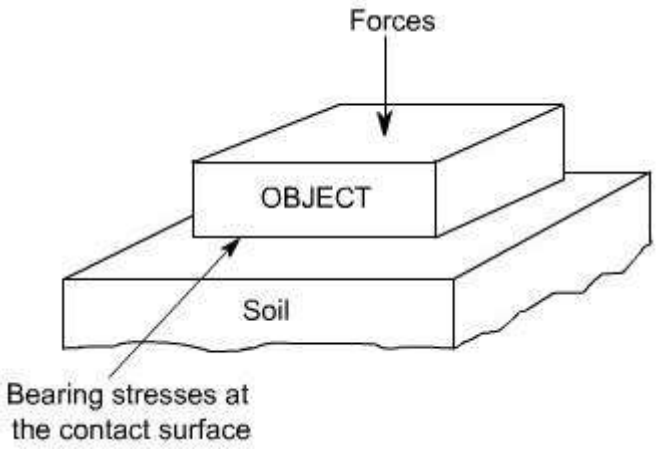

Sign convections for Normal stress

Direct stresses or normal stresses

- tensile +ve -

compressive –ve

Shear Stresses:

Let us consider now the situation, where the cross – sectional area of a block of material is subject to a distribution of forces which are parallel, rather than normal, to the area concerned. Such forces are associated with a shearing of the material, and are referred to as shear forces. The resulting stress is known as shear stress.

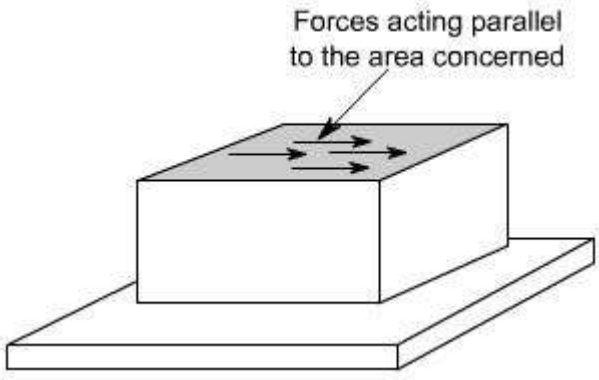

The resulting force intensities are known as shear stresses, the mean shear stress being equal to

$$\tau = \frac{P}{A}$$

Where P is the total force and A the area over which it acts. As we know that the particular stress generally holds good only at a point therefore we can define shear stress at a point as

$$\tau = \lim_{\delta A \to 0} \frac{\delta F}{\delta A}$$

The Greek symbol □(tau, suggesting tangential) is used to denote shear stress.

Complementary shear stresses:

The existence of shear stresses on any two sides of the element induces complementary shear stresses on the other two sides of the element to maintain equilibrium. As shown in the figure the shear stress □in sides AB and CD induces a complimentary shear stress □' in sides AD and BC.

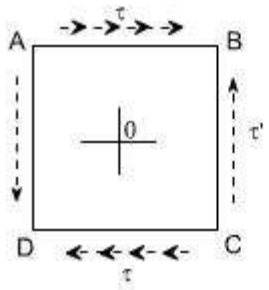

Sign convections for shear stresses:

- tending to turn the element C.W +ve.

- tending to turn the element C.C.W – ve.

Deformation of a Body due to Self Weight

Consider a bar AB hanging freely under its own weight as shown in the figure.

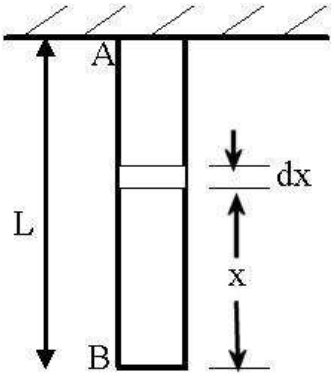

Let

L= length of the bar

A= cross-sectional area of the bar E= Young's modulus of the bar

material w= specific weight of the bar material

Then deformation due to the self-weight of the bar is $\delta L = \frac{WL}{2E}$

Members in Uni – axial state of stress

Introduction: [For members subjected to uniaxial state of stress]

For a prismatic bar loaded in tension by an axial force P, the elongation of the bar can be determined as

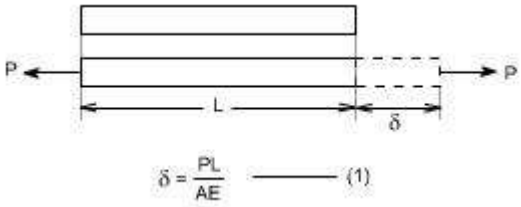

$$\delta = \frac{PL}{AE} \quad \text{——— (1)}$$

Suppose the bar is loaded at one or more intermediate positions, then equation (1) can be readily adapted to handle this situation, i.e. we can determine the axial force in each part of the bar i.e. parts AB, BC, CD, and calculate the elongation or shortening of each part separately, finally, these changes in lengths can be added algebraically to obtain the total charge in length of the entire bar.

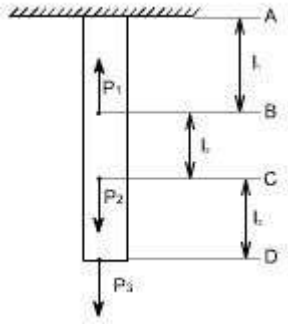

When either the axial force or the cross – sectional area varies continuosly along the axis of the bar, then equation (1) is no longer suitable. Instead, the elongation can be found by considering a deferential element of a bar and then the equation (1) becomes

$$d\delta = \frac{P_x\, dx}{E.A_x}$$

$$\delta = \int_0^l \frac{P_x\, dx}{E.A_x}$$

i.e. the axial force $P_x$and area of the cross – section A_x must be expressed as functions of x. If the expressions for $P_x$and A_x are not too complicated, the integral can be evaluated analytically, otherwise Numerical methods or techniques can be used to evaluate these integrals.

Principle of Superposition

The principle of superposition states that when there are numbers of loads are acting together on an elastic material, the resultant strain will be the sum of individual strains caused by each load acting separately.

Lecture 2: Numerical Problems on stress, shear stress in axially loaded members.

Example 1: Now let us for example take a case when the bar tapers uniformly from d at x = 0 to D at x = l

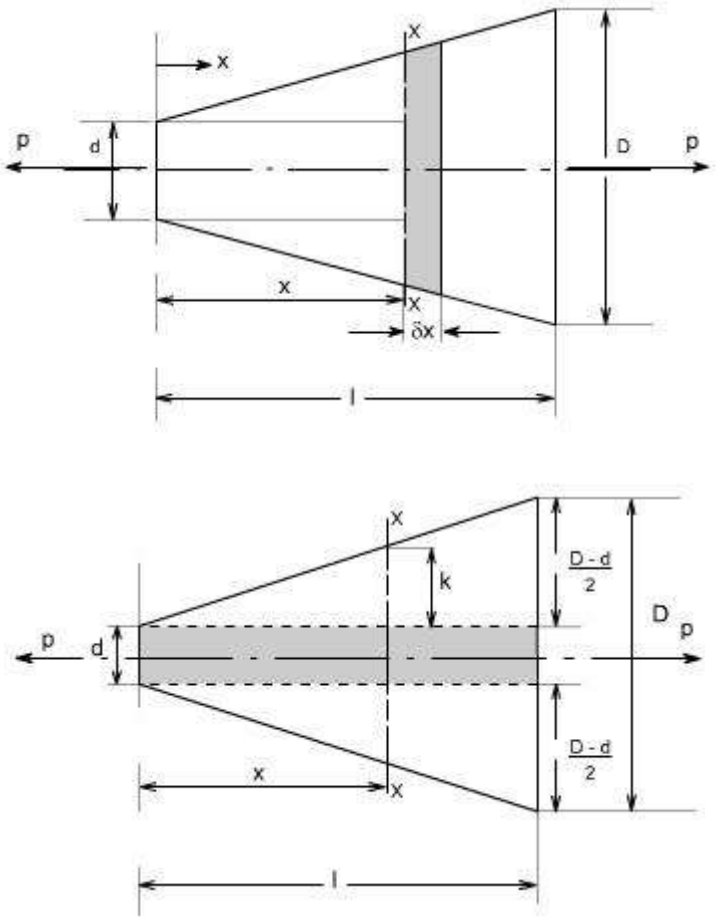

In order to compute the value of diameter of a bar at a chosen location let us determine the value of dimension k, from similar triangles

$$\frac{(D-d)/2}{l} = \frac{k}{x}$$

$$\text{Thus, } k = \frac{(D-d)x}{2l}$$

therefore, the diameter 'y' at the X-section is or

= d + 2k

$$y = d + \frac{(D-d)x}{l}$$

Hence the cross –section area at section X- X will be

$$A_x \text{ or } a = \frac{\pi}{4}y^2$$

$$= \frac{\pi}{4}\left[d + (D-d)\frac{x}{l}\right]^2$$

hence the total extension of the bar will be given by expression

$$= \frac{P}{E}\int_0^l \frac{\delta x}{a}$$

substituting the value of 'a' to get the total extention of the bar

$$= \frac{\pi P}{4E}\int_0^l \frac{\delta x}{\left[d + (D - d)\frac{x}{l}\right]^2}$$

after carrying out the intergration we get

$$= -\frac{4.P.l}{\pi E}\left[\frac{1}{D} - \frac{1}{d}\right]$$

$$= \frac{4.P.l}{\pi E D.d}$$

hence the total strain in the bar $= \mathbf{\frac{4.P.l}{\pi E\, D.d}}$

An interesting problem is to determine the shape of a bar which would have a uniform stress in it under the action of its own weight and a load P.

Example 2: stresses in Non – Uniform bars

Consider a bar of varying cross section subjected to a tensile force P as shown below.

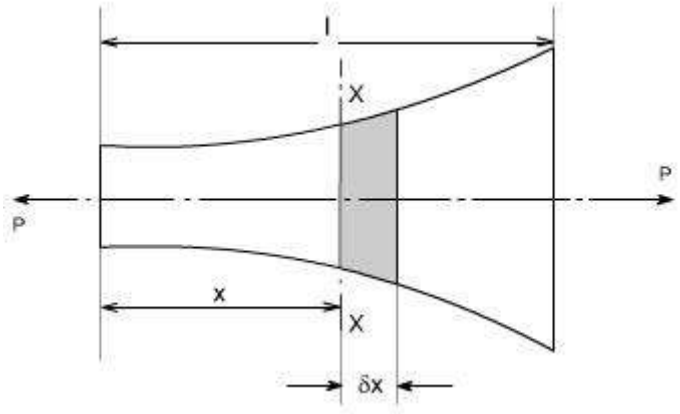

Let

a = cross sectional area of the bar at a chosen section XX then

Stress = p / a

If E = Young's modulus of bar then the strain at the section XX can be calculated

= / E

Then the extension of the short element x. = .original length = / E. x

$$= \frac{P}{E}\frac{\delta x}{a}$$

Thus, the extension for the entire bar is

$$\delta = \int_0^l \frac{P}{E}\frac{\delta x}{a}$$

$$\text{or total extension} = \frac{P}{E}\int_0^l \frac{\delta x}{a}$$

let us consider such a bar as shown in the figure below:

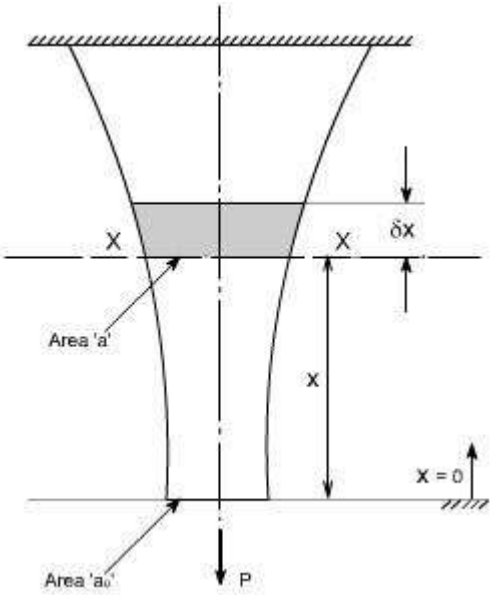

The weight of the bar being supported under section XX is

$= \int_0^x \rho g a \, dx$

where ρ is density of the bar.

thus the stress at XX is

$$\sigma = \frac{P + \int_0^x \rho g a \, dx}{a}$$

or $\sigma.a = P + \int_0^x \rho.g.a \, dx$

Differentiating the above equation with respect to x we get

$$\sigma.\frac{da}{dx} = \rho.g.a$$

$$\frac{da}{a} = \frac{\rho.g}{\sigma}.dx$$

intergrating the above equation we get

$$\int \frac{da}{a} = \int \frac{\rho.g}{\sigma} dx$$

$$\log_e a = \frac{\rho.g.x}{\sigma} + \text{constant}$$

In order to determine the constant of integration

let us apply the boundary conditions

at $x = 0$; $a = a_0$

thus, constant $= \log_e a_0$

or

$$\log_e a = \frac{\rho.g.x}{\sigma} + \log_e a_0$$

$$\log_e \left(\frac{a}{a_0}\right) = \frac{\rho.g.x}{\sigma}$$

or $\boxed{e^{\frac{\rho.g.x}{\sigma}} = \frac{a}{a_0}}$

also at $x = 0$

$$\sigma = \frac{P}{a_0}$$

Thus,

$$\frac{a}{a_0} = e^{\frac{\rho.g.x.a_0}{P}}$$

Example 1: Calculate the overall change in length of the tapered rod as shown in figure below. It carries a tensile load of 10kN at the free end and at the step change in section a compressive load of 2 MN/m evenly distributed around a circle of 30 mm diameter take the value of E = 208 GN / m^2.

This problem may be solved using the procedure as discussed earlier in this section

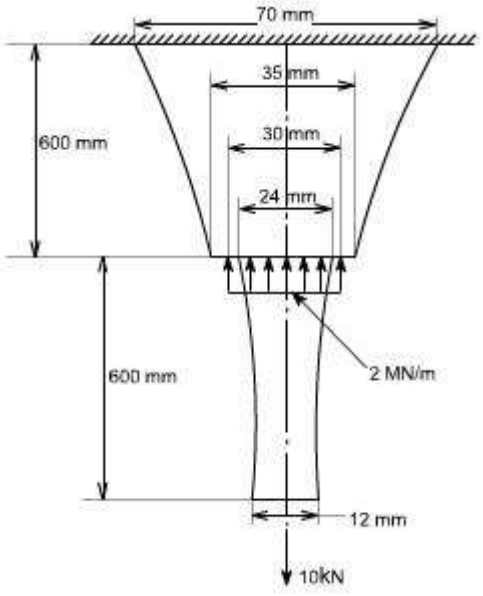

Example 2: A round bar, of length L, tapers uniformly from radius r_1 at one end to radius $r_2$at the other. Show that the extension produced by a tensile axial load P is $\frac{PL}{2\pi E r_1^2}$

If $r_2 = 2r_1$, compare this extension with that of a uniform cylindrical bar having a radius equal to the mean radius of the tapered bar.

Solution:

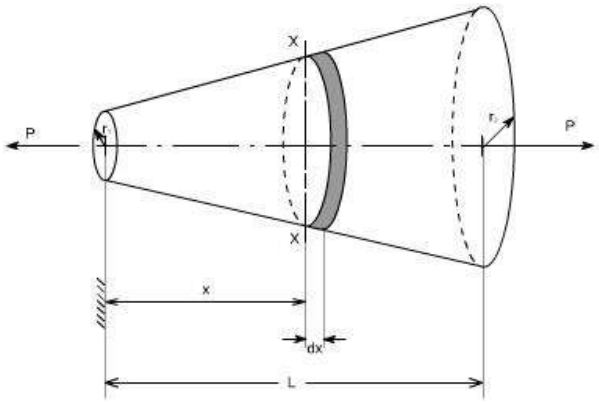

consider the above figure let r_1 be the radius at the smaller end. Then at a X crosssection XX located at a distance x from the smaller end, the value of radius is equal to

$$= r_1 + \frac{x}{L}(r_2 - r_1)$$

$$= r_1(1 + kx)$$

$$\text{where } k = \left(\frac{r_2 - r_1}{L}\right).\frac{1}{r_1}$$

$$\text{stress at section XX} = \frac{\text{load}}{\text{area}}$$

$$= \frac{P}{\pi r_1^2 (1 + kx)^2}$$

$$\text{hence strain at this section} = \frac{\text{stress}}{E}$$

$$= \frac{P}{E.\pi r_1^2 (1 + kx)^2}$$

Thus, for a small length dx of the bar at this section the extention is $\frac{P.dx}{E\pi r_1^2 (1 + kx)^2}$

Total extension of the bar can be found by integrating the above expression within the limits from x=0 to x=L

$$\text{Extension} = \int_0^L \frac{P.dx}{E.\pi r_1^2 (1 + k.x)^2}$$

$$= \frac{P}{E.\pi r_1^2}\int_0^L (1 + k.x)^{-2} dx$$

$$= \frac{P}{E.\pi r_1^2}\left[\frac{(1+kx)^{-1}}{-k}\right]_0^L$$

$$= \frac{P}{E.\pi r_1^2}\left[\frac{(1 + kx)^{-1}}{-k} - \frac{1}{-k}\right]$$

$$= \frac{P}{E.\pi r_1^2 .k}\left[1 - \frac{1}{1 + kL}\right]$$

$$= \frac{PL}{E.\pi r_1^2 (1 + kL)}$$

$$\text{since } k = \frac{(r_2 - r_1)}{r_1 L}$$

Thus, $1 + kL = r_2 / r_1$

$$\text{Therefore, the extension} = \frac{PL}{\pi E r_1 r_2}$$

Comparing of extensions

For the case when $r_2 = 2.r_1$, the value of computed extension as above

becomes equal to $\frac{PL}{2\pi E r_1^2}$

The mean radius of taper bar

$= 1 / 2(r_1 + r_2)$

$= 1 / 2(r_1 + 2 r_2)$

$= 3 / 2 . r_1$

Therefore, the extension of uniform bar

= Orginal length . strain

$$= L.\frac{\sigma}{E}$$

$$= \frac{L}{E}.\frac{P}{\pi\left(\frac{3}{2}r_1\right)^2}$$

$$= \frac{4PL}{g\pi E\pi r_1^2}$$

hence the

$$\frac{\text{Extension of uniform}}{\text{Extension of tapered}} = \left(\frac{4PL}{g\pi E\pi r_1^2}\right) \Big/ \frac{PL}{2\pi E r_1^2}$$

$$= \frac{8}{g}$$

Module 1 Lecture

3:

Strain:

When a single force or a system force acts on a body, it undergoes some deformation. This deformation per unit length is known as strain. Mathematically strain may be defined as deformation per unit length.

So,

Strain=Elongation/Original length

$$\text{Or, } \varepsilon = \frac{\Delta l}{l}$$

Elasticity;

The property of material by virtue of which it returns to its original shape and size upon removal of load is known as elasticity.

Hooks Law

It states that within elastic limit stress is proportional to strain. Mathematically

$$E = \frac{Stress}{Strain}$$

Where E = Young's Modulus

Hooks law holds good equally for tension and compression.

Poisson's Ratio;

The ratio lateral strain to longitudinal strain produced by a single stress is known as Poisson's ratio. Symbol used for poisson's ratio is σ or $1/m$.

Modulus of Elasticity (or Young's Modulus)

Young's modulus is defined as the ratio of stress to strain within elastic limit.

Deformation of a body due to load acting on it

We know that young's modulus $E = \frac{Stress}{Strain}$,

$$\text{Or, strain, } \varepsilon = \frac{\sigma}{E} = \frac{P}{AE}$$

$$E = \frac{\sigma}{\varepsilon} = \frac{P/A}{\delta l/l} = \frac{Pl}{A\,\delta l}$$

Now, strain, $\varepsilon = \frac{\delta l}{l}$

So, deformation $\boxed{\delta l = \frac{Pl}{AE}}$

Module 1

Lecture 4: Numerical problems on Stress-strain relationship, Hooke's law, Poisson's ratio, shear stress

Module 1

Lecture 5: Shear strain, modulus of rigidity, bulk modulus. Relationship between material properties of isotropic materials.

Shear Strain

The distortion produced by shear stress on an element or rectangular block is shown in the figure. The shear strain or 'slide' is expressed by angle ϕ and it can be defined as the change in the right angle. It is measured in radians and is dimensionless in nature.

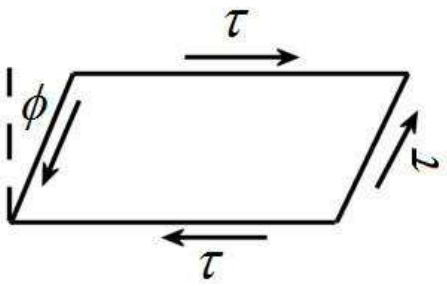

Modulus of Rigidity

For elastic materials it is found that shear stress is proportional to the shear strain within elastic limit. The ratio is called modulus rigidity. It is denoted by the symbol 'G' or 'C'.

$$G = \frac{\text{shear stress } (\text{N/mm}^2)}{\text{shear strain}}$$

Bulk modulus (K): It is defined as the ratio of uniform stress intensity to the volumetric strain. It is denoted by the symbol K.

$$K = \frac{\text{stress intensity}}{\text{volumetric strain } (\varepsilon_v)}$$

Relation between elastic constants:

Elastic constants: These are the relations which determine the deformations produced by a given stress system acting on a particular material. These factors are constant within elastic limit, and known as modulus of elasticity *E*, modulus of rigidity *G*, Bulk modulus *K* and Poisson's ratio *μ.*

Relationship between modulus of elasticity (E) and bulk modulus (K):

$$E = 3K(1 - 2\mu)$$

Relationship between modulus of elasticity (E) and modulus of rigidity (G):

$$E = 2G(1 + \mu)$$

Relation among three elastic constants:

$$E = \frac{9KG}{G + 3K}$$

Module 1:

Lecture 6:

Numerical problems on, relation between elastic constants.

Module 1:

Lecture 7: Stress-strain diagram for uniaxial loading of ductile and brittle materials.

Stress – Strain Relationship

Stress – strain diagram for mild steel

Standard specimen are used for the tension test.

There are two types of standard specimen's which are generally used for this purpose, which have been shown below:

Specimen I:

This specimen utilizes a circular X-section.

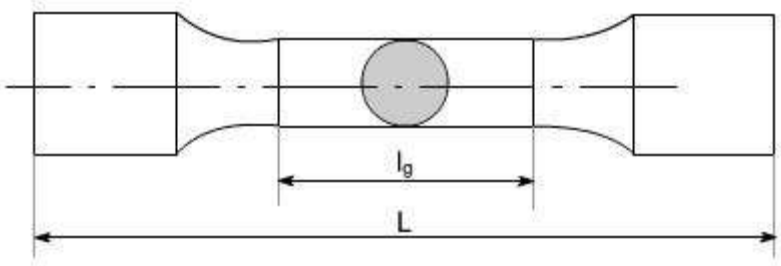

[specimen with circular X-section]

Specimen II:

This specimen utilizes a rectangular X-section.

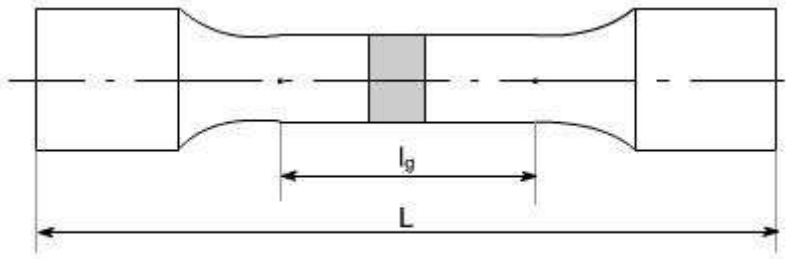

[specimen with rectangular X-section]

l_g = gauge length i.e. length of the specimen on which we want to determine the mechanical properties.The uniaxial tension test is carried out on tensile testing machine and the following steps are performed to conduct this test.

(i) The ends of the specimen are secured in the grips of the testing machine.

(ii) There is a unit for applying a load to the specimen with a hydraulic or mechanical drive.

(iii) There must be some recording device by which you should be able to measure the final output in the form of Load or stress. So the testing machines are often equipped with the pendulum type lever, pressure gauge and hydraulic capsule and the stress Vs strain diagram is plotted which has the following shape. A typical tensile test curve for the mild steel has been shown below

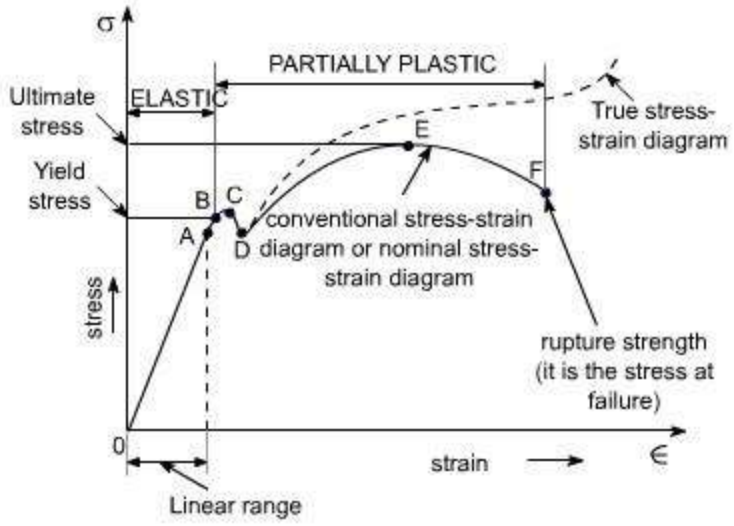

SALIENT POINTS OF THE GRAPH:

(A) So it is evident form the graph that the strain is proportional to strain or elongation is proportional to the load giving a st.line relationship. This law of proportionality is valid upto a point A.

or we can say that point A is some ultimate point when the linear nature of the graph ceases or there is a deviation from the linear nature. This point is known as **the limit of proportionality or the proportionality limit**.

(B) For a short period beyond the point A, the material may still be elastic in the sense that the deformations are completely recovered when the load is removed. The limiting point B is termed as **Elastic Limit** .

(C) and (D) - Beyond the elastic limit plastic deformation occurs and strains are not totally recoverable. There will be thus permanent deformation or permanent set when load is removed. These two points are termed as upper and lower yield points respectively. The stress at the yield point is called the yield strength.

A study a stress – strain diagrams shows that the yield point is so near the proportional limit that for most purpose the two may be taken as one. However, it is much easier to locate the former. For material which do not posses a well define yield points, In order to find the yield point or yield strength, an offset method is applied.

In this method a line is drawn parallel to the straight line portion of initial stress diagram by off setting this by an amount equal to 0.2% of the strain as shown as below and this happens especially for the low carbon steel.

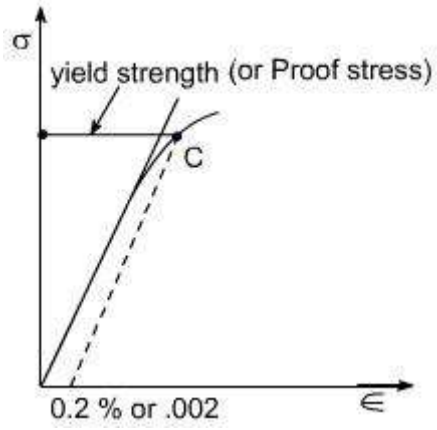

(E) A further increase in the load will cause marked deformation in the whole volume of the metal. The maximum load which the specimen can with stand without failure is called the load at the ultimate strength.

The highest point 'E' of the diagram corresponds to the ultimate strength of a material.

s_u = Stress which the specimen can with stand without failure & is known as Ultimate Strength or Tensile Strength.

s_u is equal to load at E divided by the original cross-sectional area of the bar.

(F) Beyond point E, the bar begins to forms neck. The load falling from the maximum until fracture occurs at F. Beyond point E, the cross-sectional area of the specimen begins to reduce rapidly over a relatively small length of bar and the bar is said to form a neck. This necking takes place whilst the load reduces, and fracture of the bar finally occurs at point F.

Nominal stress – Strain OR Conventional Stress – Strain diagrams:

Stresses are usually computed on the basis of the original area of the specimen; such stresses are often referred to as conventional or nominal stresses.

True stress – Strain Diagram:

Since when a material is subjected to a uniaxial load, some contraction or expansion always takes place. Thus, dividing the applied force by the corresponding actual area of the specimen at the same instant gives the so called true stress.

Percentage Elongation: 'd ':

The ductility of a material in tension can be characterized by its elongation and by the reduction in area at the cross section where fracture occurs.

It is the ratio of the extension in length of the specimen after fracture to its initial gauge length, expressed in percentage.

$$\delta = \frac{(l_1 - l_g)}{l_1} \times 100$$

l_l = gauge length of specimen after fracture(or the distance between the gage marks at fracture)

l_g= gauge length before fracture(i.e. initial gauge length)

For 50 mm gage length, steel may here a % elongation d of the order of 10% to 40%.

Ductile and Brittle Materials:

Based on this behaviour, the materials may be classified as ductile or brittle materials

Ductile Materials:

It we just examine the earlier tension curve one can notice that the extension of the materials over the plastic range is considerably in excess of that associated with elastic loading. The Capacity of materials to allow these large deformations or large extensions without failure is termed as ductility. The materials with high ductility are termed as ductile materials.

Brittle Materials:

A brittle material is one which exhibits a relatively small extensions or deformations to fracture, so that the partially plastic region of the tensile test graph is much reduced.

This type of graph is shown by the cast iron or steels with high carbon contents or concrete.

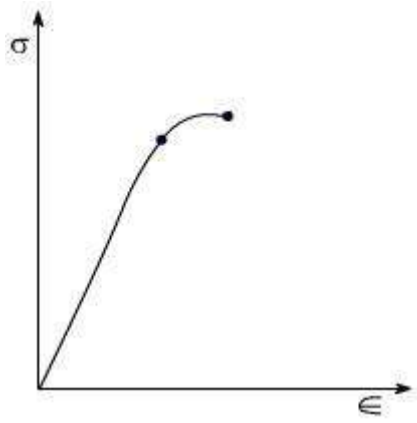

Module 1:

Lecture 8: Introduction to mechanical properties of metals-hardness, impact

Mechanical Properties of material:

Elasticity: Property of material by virtue of which it can regain its shape after removal of external load

Plasticity: Property of material by virtue of which, it will be in a state of permanent deformation even after removal of external load.

Ductility: Property of material by virtue of which, the material can be drawn into wires.

Hardness: Property of material by virtue of which the material will offer resistance to penetration or indentation.

Ball indentation Tests:

iThis method consists in pressing a hardened steel ball under a constant load P into a specially prepared flat surface on the test specimen as indicated in the figures below :

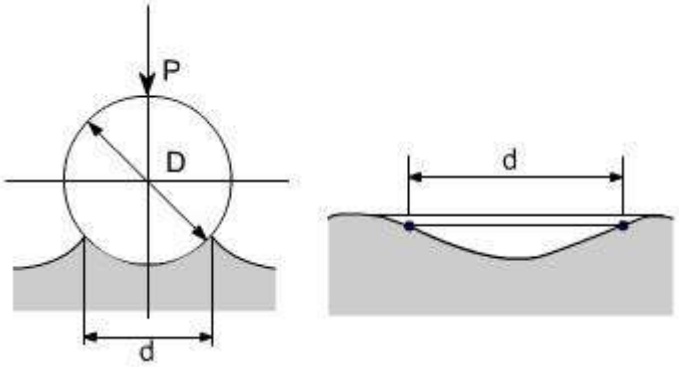

After removing the load an indentation remains on the surface of the test specimen. If area of the spherical surface in the indentation is denoted as F sq. mm. Brinell Hardness number is defined as :

BHN = P / F

F is expressed in terms of D and d D

= ball diameter

d = diametric of indentation and Brinell Hardness number is given by

$$BHN = \frac{2P}{\pi D(D - \sqrt{D^2 - d^2})}$$

Then is there is also **Vicker's Hardness Number** in which the ball is of conical shape.

IMPACT STRENGTH

Static tension tests of the unnotched specimen's do not always reveal the susceptibility of metal to brittle fracture. This important factor is determined in impact tests. In impact tests we use the notched specimen's



this specimen is placed on its supports on anvil so that blow of the striker is opposite to the notch the impact strength is defined as the energy A, required to rupture the specimen,

Impact Strength = A / f

Where f = It is the cross – section area of the specimen in cm^2 at fracture & obviously at notch.

The impact strength is a complex characteristic which takes into account both toughness and strength of a material. The main purpose of notched – bar tests is to study the simultaneous effect of stress concentration and high velocity load application

Impact test are of the severest type and facilitate brittle friction. Impact strength values can not be as yet be used for design calculations but these tests as rule provided for in specifications for carbon & alloy steels.Futher, it may be noted that in impact tests fracture may be either brittle or ductile. In the case of brittle fracture, fracture occurs by separation and is not accompanied by noticeable plastic deformation as occurs in the case of ductile fracture.

Impact loads:

Considering a weight falling from a height h, on to a collar attached at the end as shown in the figure.

Let P= equivalent static or gradually applied load which will produce the same extension x as that of the impact load W

Neglecting loss of energy due to impact, we can have:

Loss of potential energy= gain of strain energy of the bar

$$W h(\square \square x) \frac{1}{2} Px$$

Now we have extension $x = \frac{Pl}{AE}$

Substituting the value of x in the above equation we have:

$$\frac{Pl}{AE} = \frac{1}{2}\left(\frac{P l^2}{AE}\right) W(h$$

Solving the above equation we can have the following relation:

$$P = W[1 + \sqrt{1 + 2hAE/Wl}]$$

Important Case: for a particular case i.e. for h=0, for a suddenly applied load P=2W, i.e. the stress produced by a suddenly applied load is twice that of the static stress.

Numerical examples:

1. Referring to the following figure let a mass of 100 kg fall 4cm on to a collar attached to a bar of steel 2cm diameter, 3m long. Find the maximum stress set up.
Take E= 205,000 N/mm^2.

Applying the relation:

$$\frac{P}{A} = W[1 + \sqrt{1 + 2hAE/Wl}]/A$$

$$= \frac{981}{\frac{\pi}{4}100^2}\left[1 + \sqrt{1 + \frac{2 \times 40 \times \frac{\pi}{4} \times 100^2 \times 205{,}000}{981 \times 3 \times 1000}}\right]$$

$$= 134 \text{ M/mm}^2$$

Module 1:

Lecture 9: Composite Bars In Tension & Compression:-Temperature stresses in composite rods statically indeterminate problem.

Thermal stresses, Bars subjected to tension and Compression

Compound bar: In certain application it is necessary to use a combination of elements or bars made from different materials, each material performing a different function. In over head electric cables or Transmission Lines for example it is often convenient to carry the current in a set of copper wires surrounding steel wires. The later being designed to support the weight of the cable over large spans. Such a combination of materials is generally termed compound bars.

Consider therefore, a compound bar consisting of n members, each having a different length and cross sectional area and each being of a different material. Let all member have a common extension ‘x' i.e. the load is positioned to produce the same extension in each member.

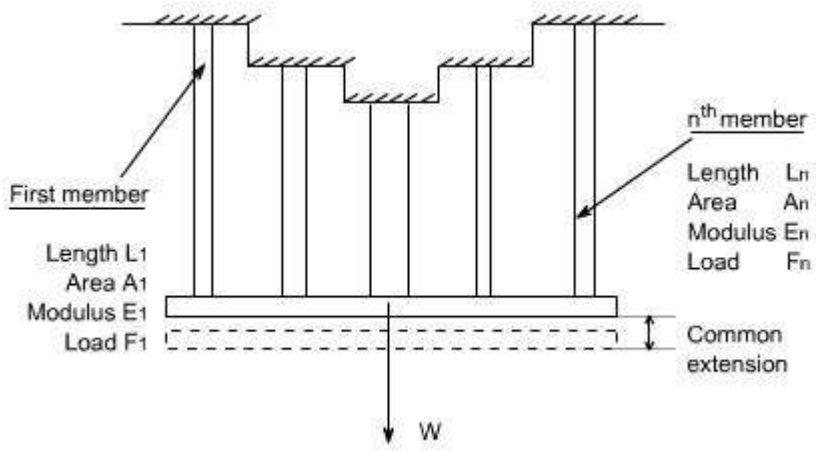

For the 'n' the members

$$\frac{\text{stress}}{\text{strain}} = E_n = \frac{F_n / A_n}{x_n / L_n}$$

$$= \frac{F_n . L_n}{A_n . x_n}$$

or $$F_n = \frac{E_n . A_n . x_n}{L_n} = \frac{E_n . A_n . x}{L_n} \quad \text{.....(1)}$$

Where F_n is the force in the nth member and A_n and L_n are its cross - sectional area and length.

Let W be the total load, the total load carried will be the sum of all loads for all the members.

$$W = \sum \frac{E_n . A_n . x}{L_n}$$

$$= x . \sum \frac{E_n . A_n}{L_n} \qquad \text{.....(2)}$$

From equation (1), force in member 1 is given as

$$F_1 = \frac{E_1 . A_1 . x}{L_1}$$

from equation (2)

$$x = \frac{W}{\sum \frac{E_n . A_n}{L_n}}$$

$$\text{Thus, } F_1 = \frac{E_1 . A_1}{L_1} . \frac{W}{\sum \left(\frac{E_n . A_n}{L_n} \right)}$$

Therefore, each member carries a portion of the total load W proportional of EA / L value.

The above expression may be writen as $$F_1 = \frac{\frac{E_1 . A_1}{L_1}}{\sum \frac{E_n . A_n}{L_n}} . W$$

if the length of each individual member in same then, we may write $$F_1 = \frac{E_1 . A_1}{\sum E . A} . W$$

Thus, the stress in member '1' may be determined as $_1 = F_1 / A_1$

Determination of common extension of compound bars: In order to determine the common extension of a compound bar it is convenient to consider it as a single bar of an imaginary material with an equivalent or combined modulus E_c.

Assumption: Here it is necessary to assume that both the extension and original lengths of the individual members of the compound bar are the same, the strains in all members will than be equal.

Total load on compound bar = $F_1 + F_2 + F_3 + \ldots\ldots + F_n$ where

F_1 , F_2 ,….,etc are the loads in members 1,2 etc

But force = stress . area,therefore

$\square (A_1 + A_2 + \ldots\ldots + A_n) = \square_1 A_1 + \square_2 A_2 + \ldots\ldots + \square_n A_n$

Where $\square$ is the stress in the equivalent single bar
Dividing throughout by the common strain .

$$\frac{\sigma}{\epsilon}(A_1 + A_2 + ... + A_n) = \frac{\sigma_1}{\epsilon}A_1 + \frac{\sigma_2}{\epsilon}A_2 + ... \frac{\sigma_n}{\epsilon}A_n$$

i.e $E_c(A_1 + A_2 + ... + A_n) = E_1A_1 + E_2A_2 + ...E_n.A_n$

or $E_c = \frac{E_1A_1 + E_2A_2 + ...E_n.A_n}{A_1 + A_2 + ... + A_n}$

or $E_c = \frac{\sum EA}{\sum A}$

with an external load W applied stress in the equivalent bar may be computed as

$\text{stress} = \frac{W}{\sum A}$

$\text{strain inthe equivalent bar} = \frac{x}{L} = \frac{W}{\sum AE_c}$

$\text{hence commen extension } x = \frac{W.L}{E_c \sum A}$

Compound bars subjected to Temp. Change : Ordinary materials expand when heated and contract when cooled, hence , an increase in temperature produce a positive thermal strain. Thermal strains usually are reversible in a sense that the member returns to its original shape when the temperature return to its original value. However, there here are some materials which do not behave in this manner. These metals differs from ordinary materials in a sence that the strains are related non linearly to temperature and some times are irreversible .when a material is subjected to a change in temp. is a length will change by an amount.

$\square_t = \square .L.t$

Or $\square_t = E.\square.t$

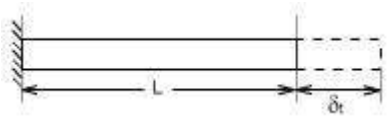

$\square$ = coefficient of linear expansion for the material

L = original Length t = temp. change

Thus an increase in temperature produces an increase in length and a decrease in temperature results in a decrease in length except in very special cases of materials with zero or negative coefficients of expansion which need not to be considered here.

If however, the free expansion of the material is prevented by some external force, then a stress is set up in the material. They stress is equal in magnitude to that which would be produced in the bar by initially allowing the bar to its free length and then applying sufficient force to return the bar to its original length.

Change in Length = $\square$ L t

Therefore, strain = □ L t / L

= □t

Therefore, the stress generated in the material by the application of sufficient force to remove this strain = strain x E or Stress = E □ t

Consider now a compound bar constructed from two different materials rigidly joined together, for simplicity.

Let us consider that the materials in this case are steel and brass.

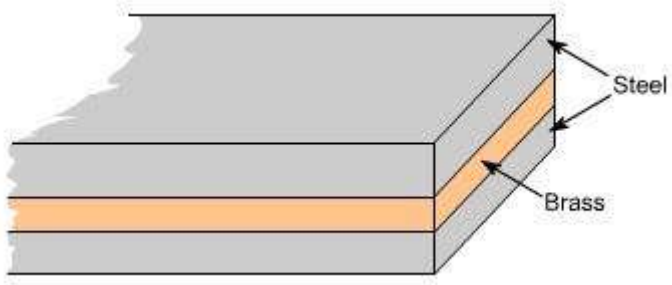

If we have both applied stresses and a temp. change, thermal strains may be added to those given by generalized hook's law equation –e.g.

$$\in_x = \frac{1}{E}\left[\sigma_x - \gamma(\sigma_y + \sigma_z)\right] + \alpha\Delta t$$

$$\in_x = \frac{1}{E}\left[\sigma_y - \gamma(\sigma_x + \sigma_z)\right] + \alpha\Delta t$$

$$\in_x = \frac{1}{E}\left[\sigma_z - \gamma(\sigma_x + \sigma_y)\right] + \alpha\Delta t$$

While the normal strains a body are affected by changes in temperatures, shear strains are not. Because if the temp. of any block or element changes, then its size changes not its shape therefore shear strains do not change.

In general, the coefficients of expansion of the two materials forming the compound bar will be different so that as the temp. rises each material will attempt to expand by different amounts. Figure below shows the positions to which the individual materials will expand if they are completely free to expand (i.e not joined rigidly together as a compound bar). The extension of any Length L is given by □L t

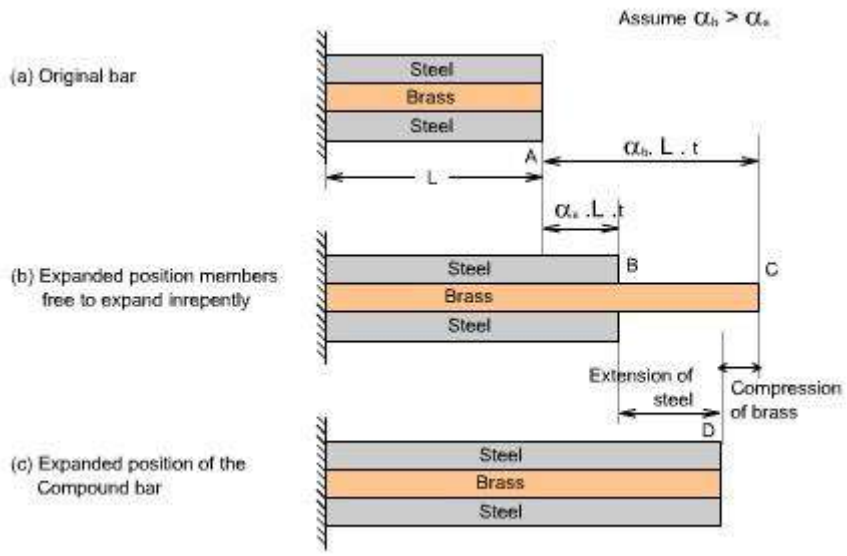

In general, changes in lengths due to thermal strains may be calculated form equation $\Delta_t = \Delta Lt$, provided that the members are able to expand or contract freely, a situation that exists in statically determinates structures. As a consequence no stresses are generated in a statically determinate structure when one or more members undergo a uniform temperature change. If in a structure (or a compound bar), the free expansion or contraction is not allowed then the member becomes s statically indeterminate, which is just being discussed as an example of the compound bar and thermal stresses would be generated.

If the two materials are now rigidly joined as a compound bar and subjected to the same temp. rise, each materials will attempt to expand to its free length position but each will be affected by the movement of the other. The higher coefficient of expansion material (brass) will therefore, seek to pull the steel up to its free length position and conversely, the lower coefficient of expansion martial (steel) will try to hold the brass back. In practice a compromised is reached, the compound bar extending to the position shown in fig (c), resulting in an effective compression of the brass from its free length position and an effective extension of steel from its free length position.

Module 2:

Lecture 1-5:

Two Dimensional State of Stress and Strain: Principal stresses. Numerical examples

Stresses on oblique plane: Till now we have dealt with either pure normal direct stress or pure shear stress. In many instances, however both direct and shear stresses acts and the resultant stress across any section will be neither normal nor tangential to the plane. A plane stse of stress is a 2 dimensional stae of stress in a sense that the stress components in one direction are all zero i.e

$\sigma_z = \tau_{yz} = \tau_{zx} = 0$

Examples of plane state of stress include plates and shells. Consider the general case of a bar under direct load F giving rise to a stress σ_y vertically

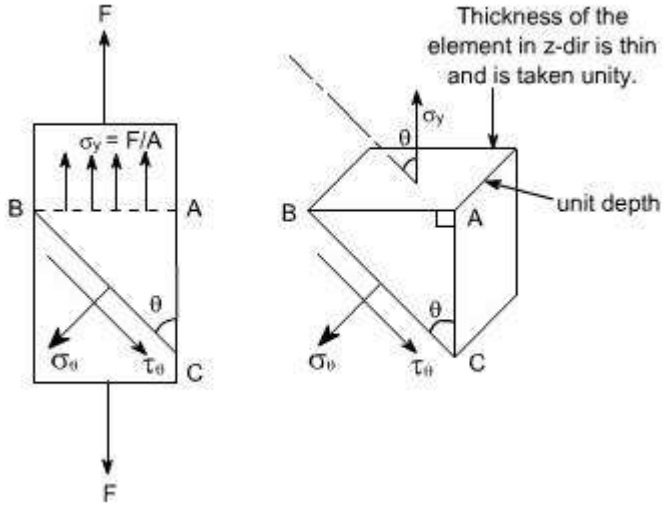

The stress acting at a point is represented by the stresses acting on the faces of the element enclosing the point. The stresses change with the inclination of the planes passing through that point i.e. the stress on the faces of the element vary as the angular position of the element changes. Let the block be of unit depth now considering the equilibrium of forces on the triangle portion ABC. Resolving forces perpendicular to BC, gives σ_θ.BC.1 = $\sigma_y \sin\theta$. AB.1 but AB/BC = sinθ or AB = BC sinθ

Substituting this value in the above equation, we get

σ_θ.BC.1 = $\sigma_y \sin\theta$. BC sinθ . 1 or $\sigma_\theta = \sigma_y \sin^2\theta$ (1)

Now resolving the forces parallel to BC

τ_θ .BC.1 = $\sigma_y \cos\theta$. AB sin. 1 again

AB = BC cos θ

τ_θ.BC.1 = $\sigma_y \cos\theta$. BC sin θ.1 or $\tau_\theta = \sigma_y \sin\theta \cos\theta$

1

$\sigma_\theta = \frac{1}{2}\sigma_y \sin 2\theta$ (2) 2

If $\theta = 90^0$ the BC will be parallel to AB and $\sigma_\theta = 0$, i.e. there will be only direct stress or normal stress.

By examining the equations (1) and (2), the following conclusions may be drawn (i) The value of direct stress σ_θ is maximum and is equal to σ_y when v= 90^0.

(ii) The shear stress σ_θ has a maximum value of 0.5 σ_y when $\theta = 45^0$

Material subjected to pure shear:

Consider the element shown to which shear stresses have been applied to the sides AB and DC

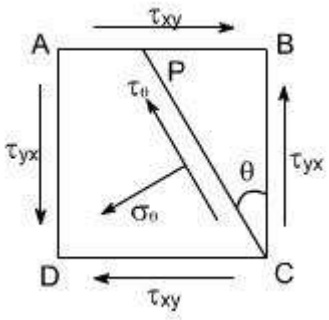

Complementary shear stresses of equal value but of opposite effect are then set up on the sides AD and BC in order to prevent the rotation of the element. Since the applied and complementary shear stresses are of equal value on the x and y planes. Therefore, they are both represented by the symbol σ_{xy}.

Now consider the equilibrium of portion of PBC

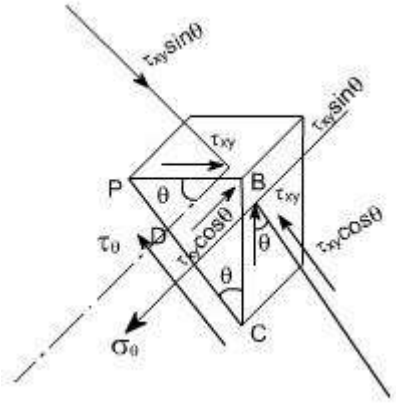

Assuming unit depth and resolving normal to PC or in the direction of σ_θ

σ_θ.PC.1 = τ_{xy}.PB.cosθ.1+τ_{xy}.BC.sinθ.1

=τ_{xy}.PB.cosθ + τ_{xy}.BC.sinθ

Now writing PB and BC in terms of PC so that it cancels out from the two sides PB/PC = sinθ BC/PC = cosθ

σ_θ.PC.1 = τ_{xy}.cosθsinθPC+τ_{xy}.cosθ.sinθ.PC

σ_θ= 2τ_{xy} sinθcosθ

Or, σ_θ= 2τ_{xy} sin2θ (1)

Now resolving forces parallel to PC or in the direction of σ_θ .then τ_{xy} PC.1

= τ_{xy} . PB sinθ-τ_{xy} BC cosθ

-ve sign has been put because this component is in the same direction as that of σ_θ . again converting the various quantities in terms of PC we have

τ_{xy} PC. 1 =τ_{xy} . PB.sin^2 $\theta$$\tau_{xy}$ -τ_{xy} PCcos^2θ

= -τ_{xy} [cos^2θ- sin^2θ] = -τ_{xy} cos2θ (2) the negative sign means that the sense of $\sigma_\theta$is opposite to that of assumed one. Let us examine the equations (1) and (2) respectively

From equation (1) i.e,

σ_θ= σ $_{xy}$ sin2θ

The equation (1) represents that the maximum value of $\sigma_\theta$is τ_{xy} when θ= 45^0.Let us take into consideration the equation (2) which states that

σ_θ= - σ $_{xy}$ cos2θ

It indicates that the maximum value of $\sigma_\theta$is τ_{xy} when θ= 0^0 or 90^0. it has a value zero when θ = 45^0.

From equation (1) it may be noticed that the normal component has maximum and minimum values of + $_{xy}$ (tension) and $_{xy}$(compression) on plane at ± 45^0 to the applied shear and on these planes the tangential component is zero.

Hence the system of pure shear stresses produces and equivalent direct stress system, one set compressive and one tensile each located at 45^0 to the original shear directions as depicted in the figure below:

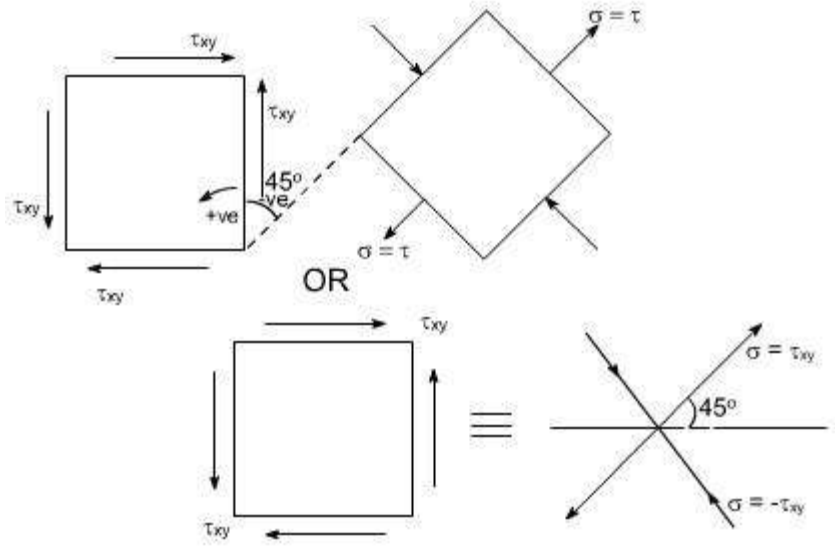

Material subjected to two mutually perpendicular direct stresses:

Now consider a rectangular element of unit depth, subjected to a system of two direct stresses both tensile, $_x$ and $_y$acting right angles to each other.

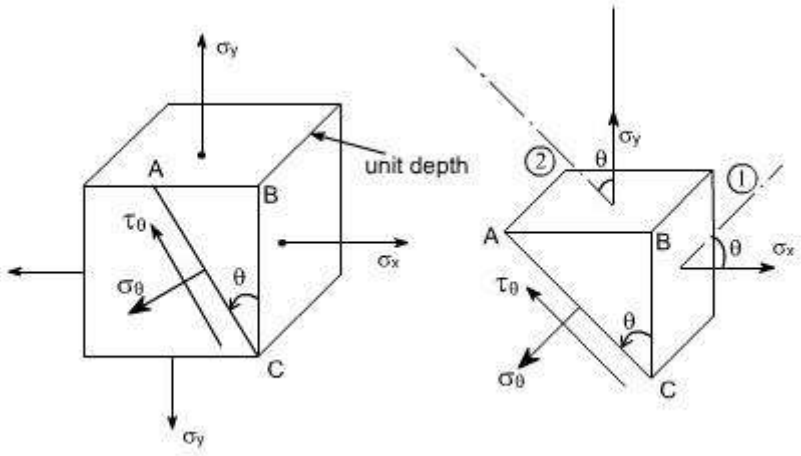

for equilibrium of the portion ABC, resolving perpendicular to AC

σ_θ. AC.1 = σ_y sin . AB.1 + σ_x cos . BC.1 converting AB and BC in terms

of AC so that AC cancels out from the sides

$\sigma_\theta = \sigma_y \sin^2 \theta + \sigma_x \cos^2 \theta$

Futher, recalling that $\cos^2\theta - \sin^2\theta = \cos 2\theta$ or $(1 - \cos 2\theta)/2 = \sin^2\theta$

Similarly (1 + cos2□)/2 = $\cos^2 q$

Hence by these transformations the expression for reduces to

= 1/2 $_y$ (1 cos2) + 1/2 $_x$ (1 + cos2) On

rearranging the various terms we get

$$\sigma_\theta = \left(\frac{\sigma_x + \sigma_y}{2}\right) + \left(\frac{\sigma_x - \sigma_y}{2}\right)\cos 2\theta \qquad (3)$$

Now resolving parallal to AC

s_q.AC.1= $_{xy}$..cos .AB.1+ $_{xy}$.BC.sin .1

The – ve sign appears because this component is in the same direction as that of AC.

Again converting the various quantities in terms of AC so that the AC cancels out from the two sides.

$$\tau_\theta .AC.1 = [\tau_x \cos\theta \sin\theta - \sigma_y \sin\theta \cos\theta]AC$$

$$\tau_\theta = (\sigma_x - \sigma_y)\sin\theta\cos\theta$$

$$= \frac{(\sigma_x - \sigma_y)}{2}\sin 2\theta$$

or $$\tau_\theta = \frac{(\sigma_x - \sigma_y)}{2}\sin 2\theta \qquad (4)$$

Conclusions :

The following conclusions may be drawn from equation (3) and (4)

(i) The maximum direct stress would be equal to $_x$ or $_y$ which ever is the greater, when = 0^0 or 90^0

(ii) The maximum shear stress in the plane of the applied stresses occurs when = 45^0

$$\tau_{max} = \frac{(\sigma_x - \sigma_y)}{2}$$

<u>Material subjected to combined direct and shear stresses</u>:

Now consider a complex stress system shown below, acting on an element of material.

The stresses $_x$ and $_y$ may be compressive or tensile and may be the result of direct forces or as a result of bending.The shear stresses may be as shown or

completely reversed and occur as a result of either shear force or torsion as shown in the figure below:

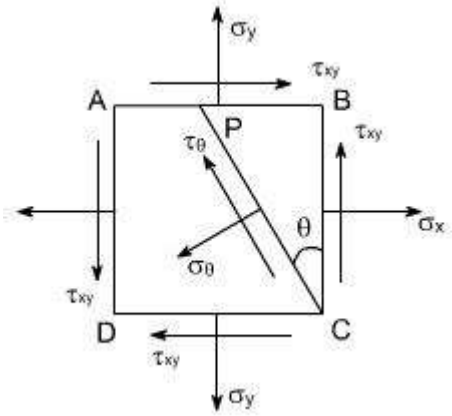

As per the double subscript notation the shear stress on the face BC should be notified as $_{yx}$, however, we have already seen that for a pair of shear stresses there is a set of complementary shear stresses generated such that $_{yx}$ = $_{xy}$

By looking at this state of stress, it may be observed that this state of stress is combination of two different cases:

(i) Material subjected to pure stae of stress shear. In this case the various formulas deserved are as follows

= $_{yx}$ sin2

= $_{yx}$ cos 2

(ii) Material subjected to two mutually perpendicular direct stresses. In this case the various formula's derived are as follows.

$$\sigma_\theta = \frac{(\sigma_x + \sigma_y)}{2} + \frac{(\sigma_x - \sigma_y)}{2}\cos 2\theta$$

$$\tau_\theta = \frac{(\sigma_x - \sigma_y)}{2}\sin 2\theta$$

To get the required equations for the case under consideration,let us add the respective equations for the above two cases such that

$$\sigma_\theta = \frac{(\sigma_x + \sigma_y)}{2} + \frac{(\sigma_x - \sigma_y)}{2}\cos 2\theta + \tau_{xy}\sin 2\theta$$

$$\tau_\theta = \frac{(\sigma_x - \sigma_y)}{2}\sin 2\theta - \tau_{xy}\cos 2\theta$$

These are the equilibrium equations for stresses at a point. They do not depend on material proportions and are equally valid for elastic and inelastic behaviour

This eqn gives two values of 2 that differ by 180^0 .Hence the planes on which maximum and minimum normal stresses occurate 90^0apart.

For σ_θ to be a maximum or minimum $\frac{d\sigma_\theta}{d\theta} = 0$

Now

$$\sigma_\theta = \frac{(\sigma_x + \sigma_y)}{2} + \frac{(\sigma_x - \sigma_y)}{2}\cos 2\theta + \tau_{xy}\sin 2\theta$$

$$\frac{d\sigma_\theta}{d\theta} = -\frac{1}{2}(\sigma_x - \sigma_y)\sin 2\theta.2 + \tau_{xy}\cos 2\theta.2$$

$$= 0$$

i.e. $-(\sigma_x - \sigma_y)\sin 2\theta + \tau_{xy}\cos 2\theta.2 = 0$

$$\tau_{xy}\cos 2\theta.2 = (\sigma_x - \sigma_y)\sin 2\theta$$

Thus, $$\boxed{\tan 2\theta = \frac{2\tau_{xy}}{(\sigma_x - \sigma_y)}}$$

From the triangle it may be determined

$$\cos 2\theta = \frac{(\sigma_x - \sigma_y)}{\sqrt{(\sigma_x - \sigma_y)^2 + 4\tau^2_{xy}}}$$

$$\sin 2\theta = \frac{2\tau_{xy}}{\sqrt{(\sigma_x - \sigma_y)^2 + 4\tau^2_{xy}}}$$

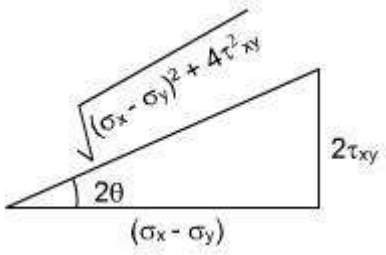

Substituting the values of cos2 and sin2 in equation (5) we get

$$\sigma_\theta = \frac{(\sigma_x + \sigma_y)}{2} + \frac{(\sigma_x - \sigma_y)}{2}\cos 2\theta + \tau_{xy}\sin 2\theta$$

$$\sigma_\theta = \frac{(\sigma_x + \sigma_y)}{2} + \frac{(\sigma_x - \sigma_y)}{2}.\frac{(\sigma_x - \sigma_y)}{\sqrt{(\sigma_x - \sigma_y)^2 + 4\tau^2_{xy}}} + \frac{\tau_{xy}.2\tau_{xy}}{\sqrt{(\sigma_x - \sigma_y)^2 + 4\tau^2_{xy}}}$$

$$= \frac{(\sigma_x + \sigma_y)}{2} + \frac{1}{2}.\frac{(\sigma_x - \sigma_y)^2}{\sqrt{(\sigma_x - \sigma_y)^2 + 4\tau^2_{xy}}} + \frac{1}{2}\frac{4\tau^2_{xy}}{\sqrt{(\sigma_x - \sigma_y)^2 + 4\tau^2_{xy}}}$$

or

$$= \frac{(\sigma_x + \sigma_y)}{2} + \frac{1}{2}.\frac{(\sigma_x - \sigma_y)^2 + 4\tau^2_{xy}}{\sqrt{(\sigma_x - \sigma_y)^2 + 4\tau^2_{xy}}}$$

$$= \frac{1}{2}(\sigma_x + \sigma_y) \pm \frac{1}{2}.\frac{\sqrt{(\sigma_x - \sigma_y)^2 + 4\tau^2_{xy}}.\sqrt{(\sigma_x - \sigma_y)^2 + 4\tau^2_{xy}}}{\sqrt{(\sigma_x - \sigma_y)^2 + 4\tau^2_{xy}}}$$

$$\sigma_\theta = \frac{1}{2}(\sigma_x + \sigma_y) \pm \frac{1}{2}.\sqrt{(\sigma_x - \sigma_y)^2 + 4\tau^2_{xy}}$$

Hence we get the two values of σ_θ, which are designated σ_1 as σ_2 and respectively,therefore

$$\sigma_1 = \frac{1}{2}(\sigma_x + \sigma_y) + \frac{1}{2}.\sqrt{(\sigma_x - \sigma_y)^2 + 4\tau^2_{xy}}$$

$$\sigma_2 = \frac{1}{2}(\sigma_x + \sigma_y) - \frac{1}{2}.\sqrt{(\sigma_x - \sigma_y)^2 + 4\tau^2_{xy}}$$

The σ_1 and σ_2 are termed as the principle stresses of the system.

Substituting the values of $\cos 2\theta$ and $\sin 2\theta$ in equation (6) we see that

$$\tau_\theta = \frac{1}{2}(\sigma_x - \sigma_y)\sin 2\theta - \tau_{xy}\cos 2\theta$$

$$= \frac{1}{2}(\sigma_x - \sigma_y)\frac{2\tau_{xy}}{\sqrt{(\sigma_x - \sigma_y)^2 + 4\tau^2_{xy}}} - \frac{\tau_{xy}.(\sigma_x - \sigma_y)}{\sqrt{(\sigma_x - \sigma_y)^2 + 4\tau^2_{xy}}}$$

$$\tau_\theta = 0$$

This shows that the values oshear stress is zero on the principal planes.

Hence the maximum and minimum values of normal stresses occur on planes of zero shearing stress. The maximum and minimum normal stresses are called the principal stresses, and the planes on which they act are called principal plane the solution of equation

$$\tan 2\theta_p = \frac{2\tau_{xy}}{(\sigma_x - \sigma_y)}$$

will yield two values of 2 separated by 180^0 i.e. two values of separated by 90^0 .Thus the two principal stresses occur on mutually perpendicular planes termed principal planes.

Therefore the two – dimensional complex stress system can now be reduced to the equivalent system of principal stresses.

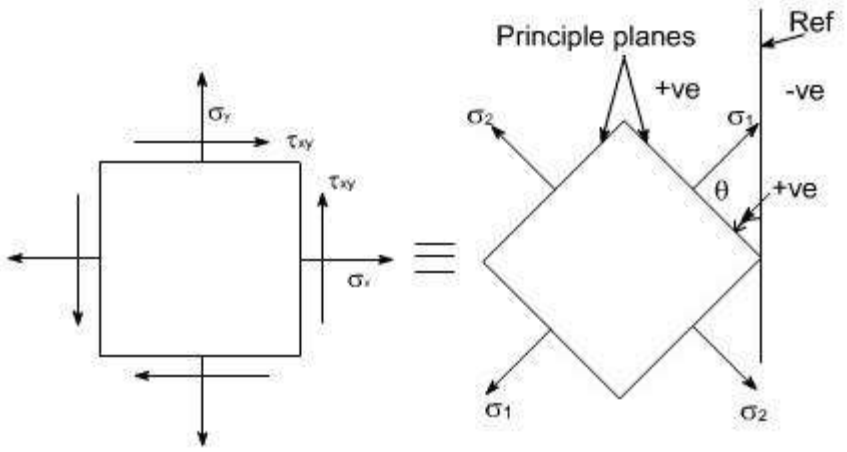

Let us recall that for the case of a material subjected to direct stresses the value of maximum shear stresses

$\tau_{max^m} = \frac{1}{2}(\sigma_x - \sigma_y)$ at $\theta = 45^0$, Thus, for a 2-dimensional state of stress, subjected to principle stresses

$\tau_{max^m} = \frac{1}{2}(\sigma_1 - \sigma_2)$, on substituting the values if σ_1 and σ_2, we get

$$\tau_{max^m} = \frac{1}{2}\sqrt{(\sigma_x - \sigma_y)^2 + 4\tau^2_{xy}}$$

Alternatively this expression can also be obtained by differentiating the expression for τ_θ with respect to θ i.e.

$$\tau_\theta = \frac{(\sigma_x - \sigma_y)}{2}\sin 2\theta - \tau_{xy}\cos 2\theta$$

$$\frac{d\tau_\theta}{d\theta} = -\frac{1}{2}(\sigma_x - \sigma_y)\cos 2\theta.2 + \tau_{xy}\sin 2\theta.2$$

$$= 0$$

or $(\sigma_x - \sigma_y)\cos 2\theta + 2\tau_{xy}\sin 2\theta = 0$

$$\tan 2\theta_s = \frac{(\sigma_y - \sigma_x)}{2\tau_{xy}} = -\frac{(\sigma_x - \sigma_y)}{2\tau_{xy}}$$

$$\tan 2\theta_s = -\frac{(\sigma_x - \sigma_y)}{2\tau_{xy}}$$

Recalling that

$$\tan 2\theta_p = \frac{2\tau_{xy}}{(\sigma_x - \sigma_y)}$$

Thus,

$$\boxed{\tan 2\theta_p . \tan 2\theta_s = 1}$$

Therefore,it can be concluded that the equation (2) is a negative reciprocal of equation (1) hence the roots for the double angle of equation (2) are 90^0 away from the corresponding angle of equation (1).

This means that the angles that angles that locate the plane of maximum or minimum shearing stresses form angles of 45^0 with the planes of principal stresses.

Futher, by making the triangle we get

$$\cos 2\theta = \frac{2\tau_{xy}}{\sqrt{(\sigma_y - \sigma_x)^2 + 4\tau^2_{xy}}}$$

$$\sin 2\theta = \frac{-(\sigma_x - \sigma_y)}{\sqrt{(\sigma_y - \sigma_x)^2 + 4\tau^2_{xy}}}$$

Therefore by substituting the values of $\cos 2\theta$ and $\sin 2\theta$ we have

$$\tau_\theta = \frac{1}{2}(\sigma_x - \sigma_y)\sin 2\theta - \tau_{xy}\cos 2\theta$$

$$= \frac{1}{2}.-\frac{(\sigma_x - \sigma_y).(\sigma_x - \sigma_y)}{\sqrt{(\sigma_y - \sigma_x)^2 + 4\tau^2_{xy}}} - \frac{\tau_{xy}.2\tau_{xy}}{\sqrt{(\sigma_y - \sigma_x)^2 + 4\tau^2_{xy}}}$$

$$= -\frac{1}{2}.\frac{(\sigma_y - \sigma_x)^2 + 4\tau^2_{xy}}{\sqrt{(\sigma_y - \sigma_x)^2 + 4\tau^2_{xy}}}$$

$$\tau_\theta = \pm\frac{1}{2}.\sqrt{(\sigma_x - \sigma_y)^2 + 4\tau^2_{xy}}$$

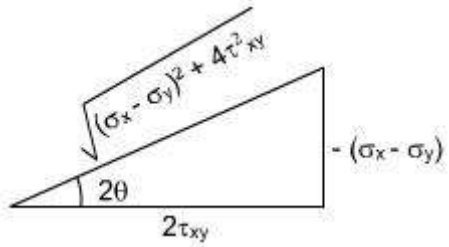

Because of root the difference in sign convention arises from the point of view of locating the planes on which shear stress act. From physical point of view these sign have no meaning.

The largest stress regard less of sign is always know as maximum shear stress.

Principal plane inclination in terms of associated principal stress:

We know that the equation $\tan 2\theta_p = \frac{2\tau_{xy}}{(\sigma_x - \sigma_y)}$

yields two values of q i.e. the inclination of the two principal planes on which the principal stresses s_1 and s_2 act. It is uncertain,however, which stress acts on which plane unless equation.

$\sigma_\theta = \frac{(\sigma_x + \sigma_y)}{2} + \frac{(\sigma_x - \sigma_y)}{2}\cos 2\theta + \tau_{xy}\sin 2\theta$ is used and observing which one of the two principal stresses is obtained.

Alternatively we can also find the answer to this problem in the following manner

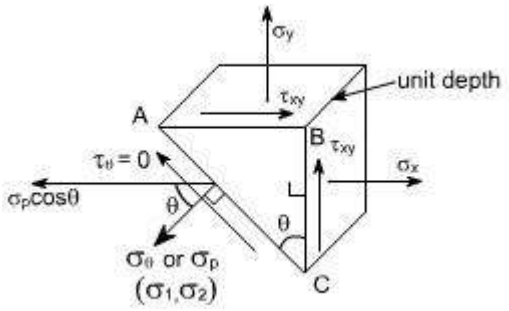

Consider once again the equilibrium of a triangular block of material of unit depth, Assuming AC to be a principal plane on which principal stresses $_p$ acts, and the shear stress is zero.

Resolving the forces horizontally we get:

$_x$ .BC . 1 + $_{xy}$ .AB . 1 = $_p$. cos . AC dividing the above equation through by BC we get

$$\sigma_x . + \tau_{xy}\frac{AB}{BC} = \sigma_p . \cos\theta . \frac{AC}{BC}$$

or

$$\sigma_x + \tau_{xy}\tan\theta = \sigma_p$$

Thus

$$\boxed{\tan\theta = \frac{\sigma_p - \sigma_x}{\tau_{xy}}}$$

GRAPHICAL SOLUTION – MOHR'S STRESS CIRCLE

The transformation equations for plane stress can be represented in a graphical form known as Mohr's circle. This grapical representation is very useful in depending the relationships between normal and shear stresses acting on any inclined plane at a point in a stresses body.

To draw a Mohr's stress circle consider a complex stress system as shown in the figure

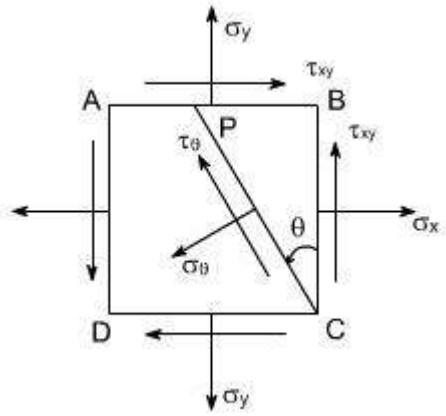

The above system represents a complete stress system for any condition of applied load in two dimensions

The Mohr's stress circle is used to find out graphically the direct stress and sheer stress on any plane inclined at to the plane on which $_x$ acts.The direction of here is taken in anticlockwise direction from the BC.

STEPS:

In order to do achieve the desired objective we proceed in the following manner

(i) Label the Block ABCD.

(ii) Set up axes for the direct stress (as abscissa) and shear stress (as ordinate)

(iii) Plot the stresses on two adjacent faces e.g. AB and BC, using the following sign convention.

Direct stresses tensile positive; compressive, negative

Shear stresses – tending to turn block clockwise, positive

– tending to turn block counter clockwise, negative

[i.e shearing stresses are +ve when its movement about the centre of the element is clockwise]

This gives two points on the graph which may than be labeled as $\overline{AB}$ and $\overline{BC}$ respectively to denote stresses on these planes.

(iv) Join $\overline{AB}$ and $\overline{BC}$.

(v) The point P where this line cuts the s axis is than the centre of Mohr's stress circle and the line joining $\overline{AB}$ and $\overline{BC}$ is diameter. Therefore the circle can now be drawn.

Now every point on the circle then represents a state of stress on some plane through C.

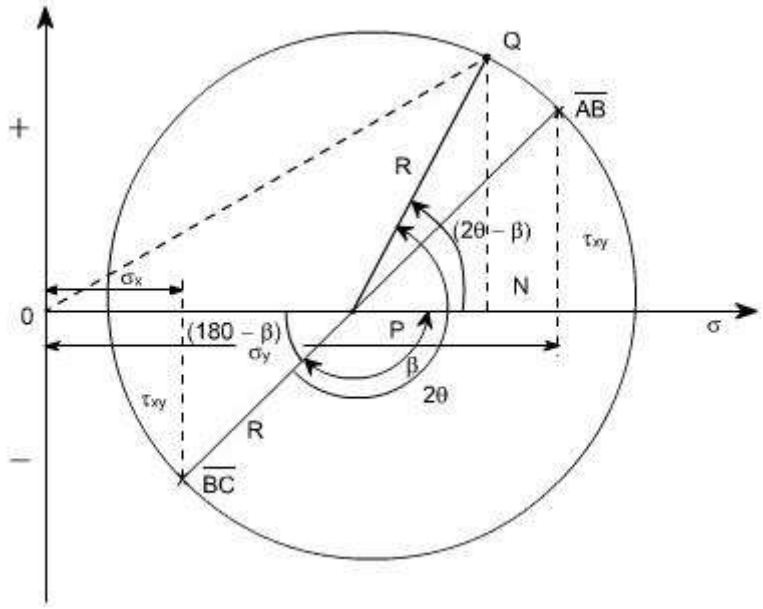

Proof:

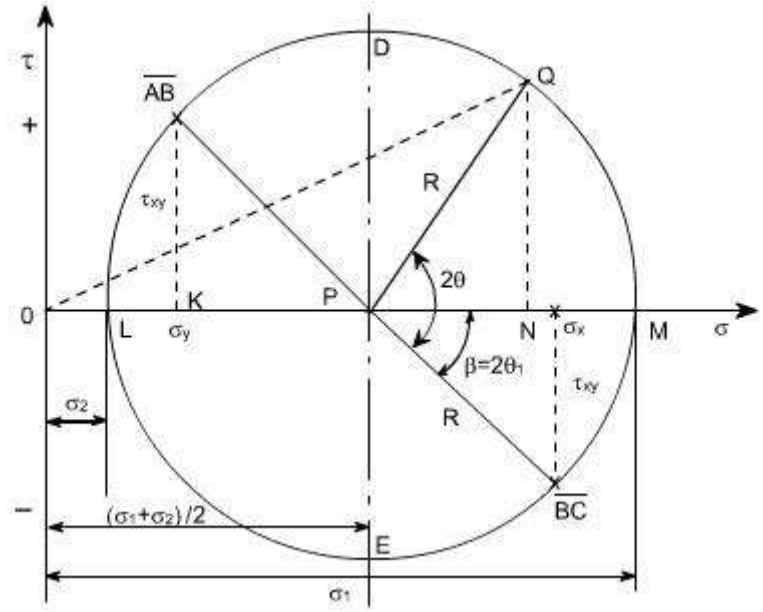

Consider any point Q on the circumference of the circle, such that PQ makes an angle 2 with BC, and drop a perpendicular from Q to meet the s axis at N.Then OQ represents the resultant stress on the plane an angle to BC. Here we have assumed that x y

Now let us find out the coordinates of point Q. These are ON and QN.

From the figure drawn earlier

ON = OP + PN

OP = OK + KP

OP = $_y$ + 1/2 ($_x$ $_y$)

= $_y$ / 2 + $_y$ / 2 + $_x$ / 2 + $_y$ / 2

= ($_x$ + $_y$) / 2

PN = Rcos(2)

hence ON = OP + PN

= ($_x$ + $_y$) / 2 + Rcos(2) = ($_x$ + $_y$) / 2 + Rcos2 cos + Rsin2 sin now make the substitutions for Rcos and Rsin .

$R\cos\beta = \frac{(\sigma_x - \sigma_y)}{2}$; $R\sin\beta = \tau_{xy}$

Thus,

ON = 1/2 ($_x$ + $_y$) + 1/2 ($_x$ $_y$)cos2 + $_{xy}$sin2 (1)

Similarly QM = Rsin(2)

= Rsin2 cos - Rcos2 sin

Thus, substituting the values of R cos and Rsin , we get

QM = 1/2 ($_x$ $_y$)sin2 $_{xy}$cos2 (2)

If we examine the equation (1) and (2), we see that this is the same equation which we have already derived analytically

Thus the co-ordinates of Q are the normal and shear stresses on the plane inclined at to BC in the original stress system.

N.B: Since angle $\overline{BC}$ PQ is 2 on Mohr's circle and not it becomes obvious that angles are doubled on Mohr's circle. This is the only difference, however, as They are measured in the same direction and from the same plane in both figures.

Further points to be noted are :

(1) The direct stress is maximum when Q is at M and at this point obviously the sheer stress is zero, hence by definition OM is the length representing the maximum principal stresses $_1$ and 2 $_1$ gives the angle of the plane $_1$ from BC. Similar OL is the other principal stress and is represented by $_2$

(2) The maximum shear stress is given by the highest point on the circle and is represented by the radius of the circle.

This follows that since shear stresses and complimentary sheer stresses have the same value; therefore the centre of the circle will always lie on the s axis midway between $_x$ and $_y$. [since + $_{xy}$ & $_{xy}$ are shear stress & complimentary shear stress so they are same in magnitude but different in sign.]

(3) From the above point the maximum sheer stress i.e. the Radius of the Mohr's stress circle would be

$$\frac{(\sigma_x - \sigma_y)}{2}$$

While the direct stress on the plane of maximum shear must be mid – may between $_x$ and $_y$ i.e

$$\frac{(\sigma_x + \sigma_y)}{2}$$

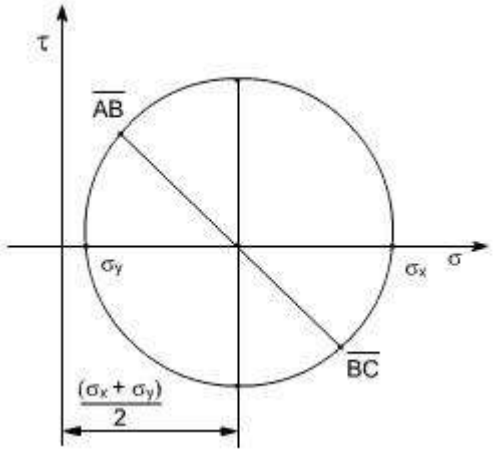

(4) As already defined the principal planes are the planes on which the shear components are zero.

Therefore are conclude that on principal plane the sheer stress is zero.

(5) Since the resultant of two stress at 90^0 can be found from the parallogram of vectors as shown in the diagram.Thus, the resultant stress on the plane at q to BC is given by OQ on Mohr's Circle.

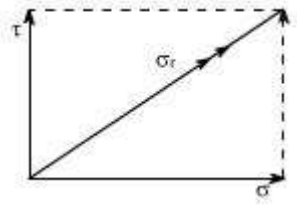

(6) The graphical method of solution for a complex stress problems using Mohr's circle is a very powerful technique, since all the information relating to any plane

within the stressed element is contained in the single construction. It thus, provides a convenient and rapid means of solution. Which is less prone to arithmetical errors and is highly recommended.

Numericals:

Let us discuss few representative problems dealing with complex state of stress to be solved either analytically or graphically.

Q 1: A circular bar 40 mm diameter carries an axial tensile load of 105 kN. What is the Value of shear stress on the planes on which the normal stress has a value of 50 MN/m^2 tensile.

Solution:

Tensile stress $_y = F / A = 105 \times 10^3 / \times (0.02)^2$

$= 83.55\ MN/m^2$

Now the normal stress on an obliqe plane is given by the relation

$= {}_y \sin^2$

$50 \times 10^6 = 83.55\ MN/m^2 \times 10^6 \sin^2$

$= 50^0 68'$

The shear stress on the oblique plane is then given by

$= 1/2\ {}_y \sin 2$

$= 1/2 \times 83.55 \times 10^6 \times \sin 101.36$

$= 40.96\ MN/m^2$

Therefore the required shear stress is 40.96 MN/m^2 **Q2:**

For a given loading conditions the state of stress in the wall of a cylinder is expressed as follows:

(a) 85 MN/m^2 tensile

(b) 25 MN/m^2 tensile at right angles to (a)

(c) Shear stresses of 60 MN/m^2 on the planes on which the stresses (a) and (b) act; the sheer couple acting on planes carrying the 25 MN/m^2 stress is clockwise in effect.

Calculate the principal stresses and the planes on which they act. What would be the effect on these results if owing to a change of loading (a) becomes compressive while stresses (b) and (c) remain unchanged **Solution:**

The problem may be attempted both analytically as well as graphically. Let us first obtain the analytical solution

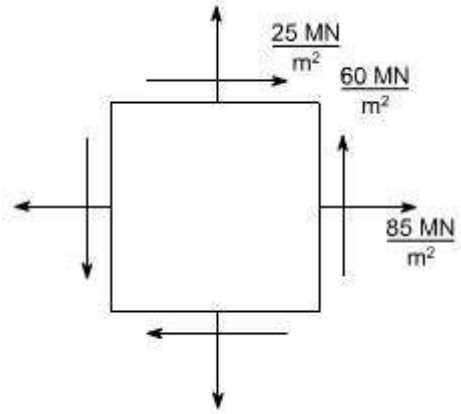

The principle stresses are given by the formula

$$\sigma_1 \text{ and } \sigma_2$$

$$= \frac{1}{2}(\sigma_x + \sigma_y) \pm \frac{1}{2}\sqrt{(\sigma_x - \sigma_y)^2 + 4\tau^2_{xy}}$$

$$= \frac{1}{2}(85 + 25) \pm \frac{1}{2}\sqrt{(85 + 25)^2 + (4 \times 60^2)}$$

$$= 55 \pm \frac{1}{2}.60\sqrt{5} = 55 \pm 67$$

$$\Rightarrow \sigma_1 = 122 \text{ MN/m}^2$$

$$\sigma_2 = -12 \text{ MN/m}^2 \text{(compressive)}$$

For finding out the planes on which the principle stresses act us the equation $\tan 2\theta = \left(\frac{2\tau_{xy}}{\sigma_x - \sigma_y}\right)$

The solution of this equation will yeild two values i.e they $_1$ and $_2$ giving $_1 = 31^0 71'$ & $_2 = 121^0 71'$

(b) In this case only the loading (a) is changed i.e. its direction had been changed. While the other stresses remains unchanged hence now the block diagram becomes.

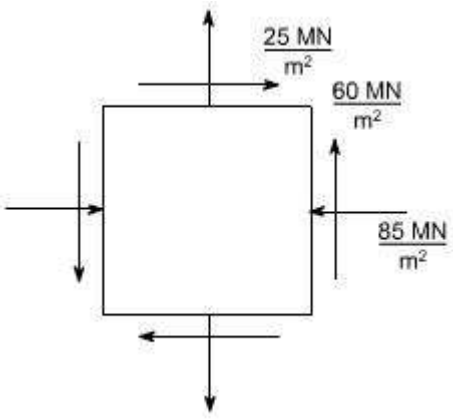

Again the principal stresses would be given by the equation.

$$\sigma_1 \& \sigma_2 = \frac{1}{2}(\sigma_x + \sigma_y) \pm \frac{1}{2}\sqrt{(\sigma_x - \sigma_y)^2 + 4\tau^2_{xy}}$$

$$= \frac{1}{2}(-85 + 25) \pm \frac{1}{2}\sqrt{(-85 - 25)^2 + (4 \times 60^2)}$$

$$= \frac{1}{2}(-60) \pm \frac{1}{2}\sqrt{(-85 - 25)^2 + (4 \times 60^2)}$$

$$= -30 \pm \frac{1}{2}\sqrt{12100 + 14400}$$

$$= -30 \pm 81.4$$

$\sigma_1 = 51.4\ MN/m^2$; $\sigma_2 = -111.4\ MN/m^2$

Again for finding out the angles use the following equation.

$$\tan 2\theta = \left(\frac{2\tau_{xy}}{\sigma_x - \sigma_y}\right)$$

$$= \frac{2 \times 60}{-85 - 25} = +\frac{120}{-110}$$

$$= -\frac{12}{11}$$

$$2\theta = \tan\left(-\frac{12}{11}\right)$$

$$\Rightarrow \theta = -23.74^0$$

Thus, the two principle stresses acting on the two mutually perpendicular planes i.e principle planes may be depicted on the element as shown below:

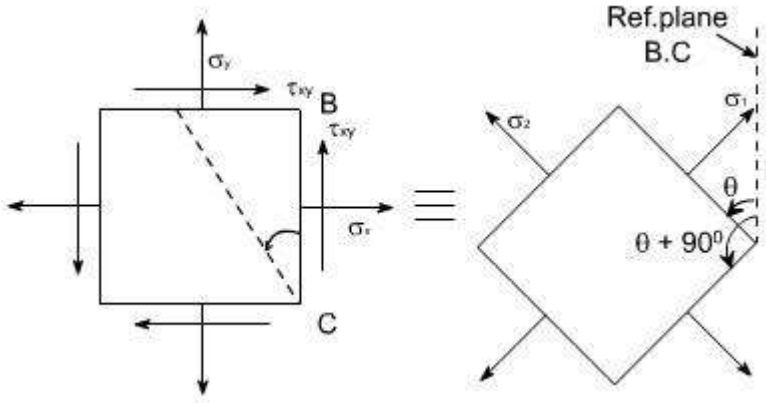

So this is the direction of one principle plane & the principle stresses acting on this would be $_1$ when is acting normal to this plane, now the direction of other principal plane would be 90^0 + because the principal planes are the two mutually perpendicular plane, hence rotate the another plane + 90^0 in the same direction to get the another plane, now complete the material element if is negative that means we are measuring the angles in the opposite direction to the reference plane BC .

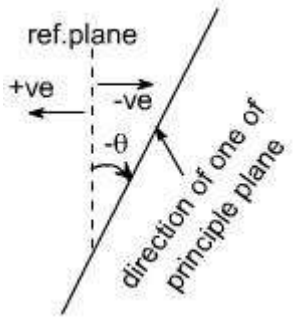

Therefore the direction of other principal planes would be { + 90} since the angle is always less in magnitude then 90 hence the quantity (+ 90) would be positive therefore the Inclination of other plane with reference plane would be positive therefore if just complete the Block. It would appear as

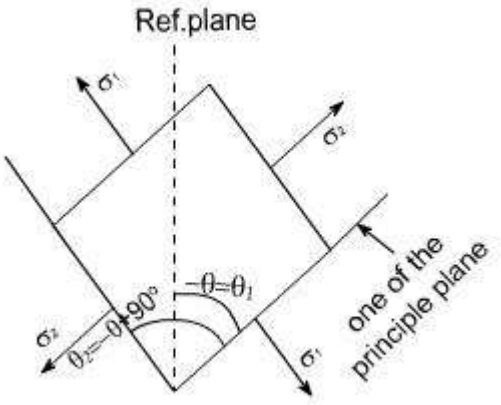

If we just want to measure the angles from the reference plane, than rotate this block through 180^0 so as to have the following appearance.

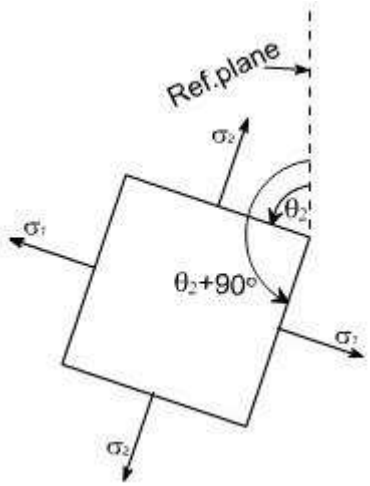

So whenever one of the angles comes negative to get the positive value, first Add 90^0 to the value and again add 90^0 as in this case $= 23^074'$ so $_1 = 23^074' + 90^0 = 66^026'$ .Again adding 90^0 also gives the direction of other principle planes

i.e $_2 = 66^026' + 90^0 = 156^026'$

This is how we can show the angular position of these planes clearly.

GRAPHICAL SOLUTION:

Mohr's Circle solution: The same solution can be obtained using the graphical solution i.e the Mohr's stress circle,for the first part, the block diagram becomes

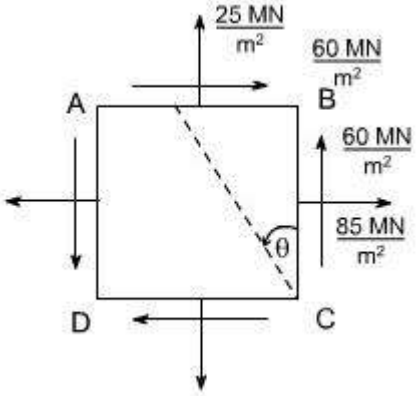

Construct the graphical construction as per the steps given earlier.

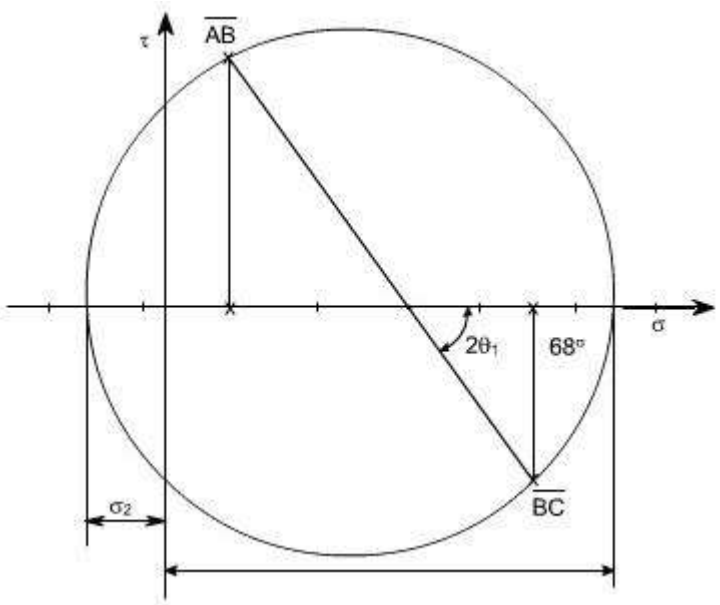

Taking the measurements from the Mohr's stress circle, the various quantities computed are

$_1$ = 120 MN/m^2 tensile

$_2$ = 10 MN/m^2 compressive

$_1$ = 34^0 counter clockwise from BC

$_2$ = 34^0 + 90 = 124^0 counter clockwise from BC

Part Second : The required configuration i.e the block diagram for this case is shown along with the stress circle.

By taking the measurements, the various quantites computed are given as

$_1$ = 56.5 MN/m^2 tensile

$_2$ = 106 MN/m^2 compressive

$_1$ = 66^{0}15' counter clockwise from BC

$_2$ = 156^{0}15' counter clockwise from BC **Salient points of**

Mohr's stress circle:

1. complementary shear stresses (on planes 90^0 apart on the circle) are equal in magnitude
2. The principal planes are orthogonal: points L and M are 180^0 apart on the circle (90^0 apart in material)
3. There are no shear stresses on principal planes: point L and M lie on normal stress axis.
4. The planes of maximum shear are 45^0 from the principal points D and E are 90^0 , measured round the circle from points L and M.
5. The maximum shear stresses are equal in magnitude and given by points D and E
6. The normal stresses on the planes of maximum shear stress are equal i.e. points D and E both have normal stress co-ordinate which is equal to the two principal stresses.

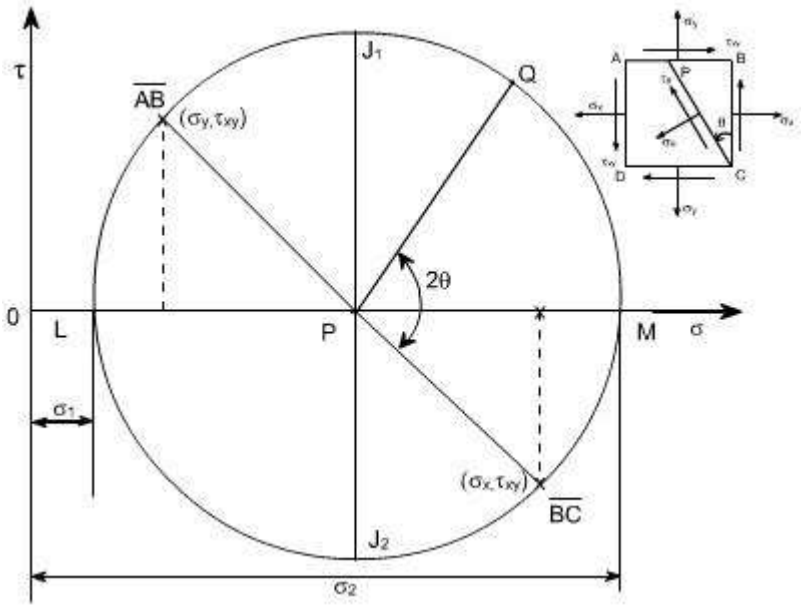

As we know that the circle represents all possible states of normal and shear stress on any plane through a stresses point in a material. Further we have seen that the co-ordinates of the point 'Q' are seen to be the same as those derived from

equilibrium of the element. i.e. the normal and shear stress components on any plane passing through the point can be found using Mohr's circle. Worthy of note:

1. The sides AB and BC of the element ABCD, which are 90^0 apart, are represented on the circle by $\overline{AB}$ P and $\overline{BC}$ P and they are 180^0 apart.
2. It has been shown that Mohr's circle represents all possible states at a point. Thus, it can be seen at a point. Thus, it, can be seen that two planes LP and PM, 180^0 apart on the diagram and therefore 90^0 apart in the material, on which shear stress is zero. These planes are termed as principal planes and normal stresses acting on them are known as principal stresses.

   Thus , $_1$ = OL

   $_2$ = OM
3. The maximum shear stress in an element is given by the top and bottom points of the circle i.e by points J_1 and J_2 ,Thus the maximum shear stress would be equal to the radius of i.e. $_{max}$= 1/2($_1$ $_2$),the corresponding normal stress is obviously the distance OP = 1/2 ($_x$+ $_y$) , Further it can also be seen that the planes on which the shear stress is maximum are situated 90^0 from the principal planes (on circle), and 45^0 in the material.

4.The minimum normal stress is just as important as the maximum. The algebraic minimum stress could have a magnitude greater than that of the maximum principal stress if the state of stress were such that the centre of the circle is to the left of orgin.

i.e. if $_1$ = 20 MN/m^2 (say) $_2$ =

80 MN/m^2 (say)

Then $_{max}^m$ = ($_1$ $_2$ / 2) = 50 MN/m^2

If should be noted that the principal stresses are considered a maximum or minimum mathematically e.g. a compressive or negative stress is less than a positive stress, irrespective or numerical value.

5. Since the stresses on perpendular faces of any element are given by the coordinates of two diametrically opposite points on the circle, thus, the sum of the two normal stresses for any and all orientations of the element is constant, i.e. Thus sum is an invariant for any particular state of stress.

Sum of the two normal stress components acting on mutually perpendicular planes at a point in a state of plane stress is not affected by the orientation of these planes.

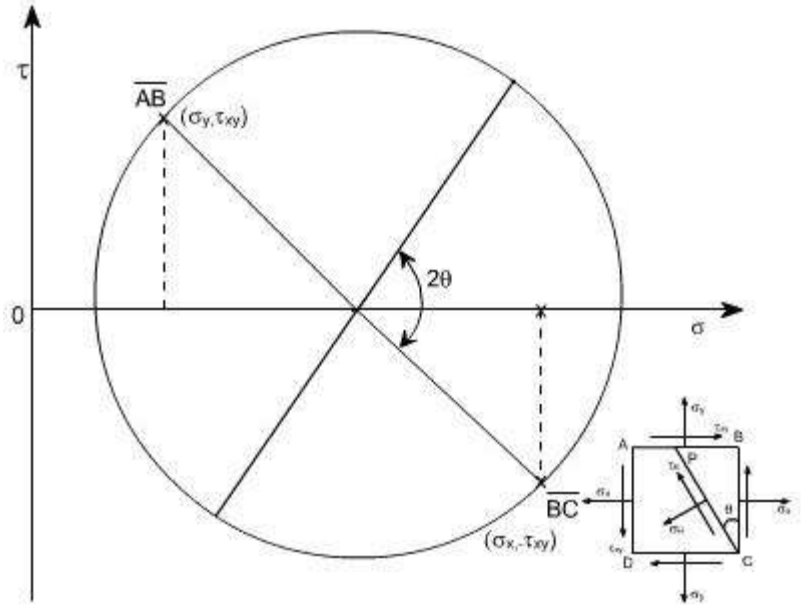

This can be also understand from the circle Since AB and BC are diametrically opposite thus, what ever may be their orientation, they will always lie on the diametre or we can say that their sum won't change, it can also be seen from analytical relations

We know $\sigma_n = \frac{(\sigma_x + \sigma_y)}{2} + \frac{(\sigma_x - \sigma_y)}{2}\cos 2\theta + \tau_{xy} \sin 2\theta$

on plane BC; = 0 $_{n1}$ =

$_x$

on plane AB; = 270^0 $_{n2}$ =

$_y$

Thus $_{n1}$ + $_{n2}$= $_x$+ $_y$

6. If $_1$ = $_2$, the Mohr's stress circle degenerates into a point and no shearing stresses are developed on xy plane.

7. If $_x$+ $_y$= 0, then the center of Mohr's circle coincides with the origin of co-ordinates.

Module 2

Lecture 6-7: Thin cylinder and thin spherical shells under internal pressure and numerical examples. Wire winding of thin cylinders. Numerical examples.

Cylindrical Vessel with Hemispherical Ends:

Let us now consider the vessel with hemispherical ends. The wall thickness of the cylindrical and hemispherical portion is different. While the internal diameter of both the portions is assumed to be equal

Let the cylindrical vassal is subjected to an internal pressure p.

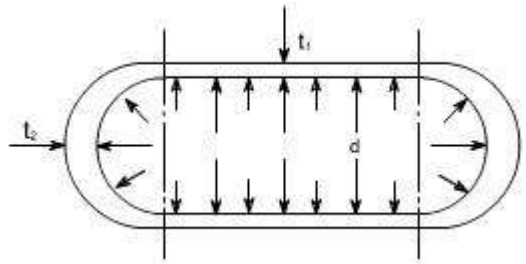

For the Cylindrical Portion

hoop or circumferential stress $= \sigma_{HC}$ 'c' here synifies the cylindrical portion.

$$= \frac{pd}{2t_1}$$

longitudnal stress $= \sigma_{LC}$

$$= \frac{pd}{4t_1}$$

hoop or circumferential strain $\in_2 = \frac{\sigma_{HC}}{E} - \nu\frac{\sigma_{LC}}{E} = \frac{pd}{4t_1E}[2-\nu]$

or $\boxed{\in_2 = \frac{pd}{4t_1E}[2-\nu]}$

For The Hemispherical Ends:

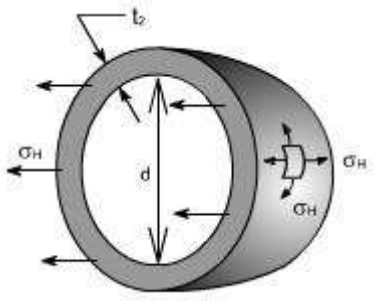

Because of the symmetry of the sphere the stresses set up owing to internal pressure will be two mutually perpendicular hoops or circumferential stresses of equal values. Again the radial stresses are neglected in comparison to the hoop stresses as with this cylinder having thickness to diametre less than1:20.

Consider the equilibrium of the half – sphere

Force on half-sphere owing to internal pressure = pressure x projected Area =

p. $d^2/4$

$$\text{Resisting force} = \sigma_H \,.\, \pi.d.t_2$$

$$\therefore \quad p.\frac{\pi.d^2}{4} = \sigma_H \,.\, \pi d.t_2$$

$$\Rightarrow \ \sigma_H \text{ (for sphere)} = \frac{pd}{4t_2}$$

$$\text{similarly the hoop strain} = \frac{1}{E}\left[\sigma_H - \nu.\sigma_H\right] = \frac{\sigma_H}{E}[1-\nu] = \frac{pd}{4t_2E}[1-\nu] \text{ or } \boxed{\epsilon_{2s} = \frac{\mathbf{pd}}{\mathbf{4t_2E}}[\mathbf{1}-\boldsymbol{\nu}]}$$



Fig – shown the (by way of dotted lines) the tendency, for the cylindrical portion and the spherical ends to expand by a different amount under the action of internal pressure. So owing to difference in stress, the two portions (i.e. cylindrical and spherical ends) expand by a different amount. This incompatibly of deformations causes a local bending and sheering stresses in the neighborhood of the joint. Since there must be physical continuity between the ends and the cylindrical portion, for this reason, properly curved ends must be used for pressure vessels.

Thus equating the two strains in order that there shall be no distortion of the junction

$$\frac{pd}{4t_1E}[2-\nu] = \frac{pd}{4t_2E}[1-\nu] \text{ or } \frac{t_2}{t_1} = \frac{1-\nu}{2-\nu}$$

But for general steel works ν = 0.3, therefore, the thickness ratios becomes

t_2 / t_1 = 0.7/1.7 or $t_1 \approx 2.4t_2$

i.e. the thickness of the cylinder walls must be approximately 2.4 times that of the hemispheroid ends for no distortion of the junction to occur.

SUMMARY OF THE RESULTS : Let us summarise the derived results

(A) The stresses set up in the walls of a thin cylinder owing to an internal pressure p are :

(i) Circumferential or loop stress

σ_H = pd/2t

(ii) Longitudinal or axial stress

$\sigma_L = pd/4t$

Where d is the internal diametre and t is the wall thickness of the cylinder.

then

Longitudinal strain $\varepsilon_L = 1 / E [\sigma_L - \sigma\sigma_H]$

Hoop stain $\varepsilon_H = 1 / E [\sigma_H - v\sigma_L]$

(B) Change of internal volume of cylinder under pressure

$$= \frac{pd}{4tE}[5 - 4\nu]V$$

(C) Fro thin spheres circumferential or loop stress

$$\sigma_H = \frac{pd}{4t}$$

Thin rotating ring or cylinder

Consider a thin ring or cylinder as shown in Fig below subjected to a radial internal pressure p caused by the centrifugal effect of its own mass when rotating. The centrifugal effect on a unit length of the circumference is $p = m \omega^2 r$

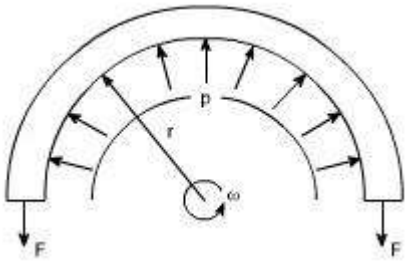

Fig 19.1: Thin ring rotating with constant angular velocity

Here the radial pressure ‘p' is acting per unit length and is caused by the centrifugal effect if its own mass when rotating.

Thus considering the equilibrium of half the ring shown in the figure,

2F = p x 2r (assuming unit length), as 2r is the projected area

F = pr

Where F is the hoop tension set up owing to rotation.

The cylinder wall is assumed to be so thin that the centrifugal effect can be assumed constant across the wall thickness.

F = mass x acceleration = $\mathbf{m\ \omega^2\ r\ x\ r}$

This tension is transmitted through the complete circumference and therefore is resisted by the complete cross – sectional area.

hoop stress = F/A = $\mathbf{m\ \omega^2\ r^2\ /\ A}$

Where A is the cross – sectional area of the ring.

Now with unit length assumed m/A is the mass of the material per unit volume, i.e. the density .

hoop stress $\sigma_H = \rho\omega^2\ \mathbf{r^2}$

Module 2

Lecture 8-10: Torsion of solid circular shafts

Torsion of circular shafts

Definition of Torsion: Consider a shaft rigidly clamped at one end and twisted at the other end by a torque T = F.d applied in a plane perpendicular to the axis of the bar such a shaft is said to be in torsion.

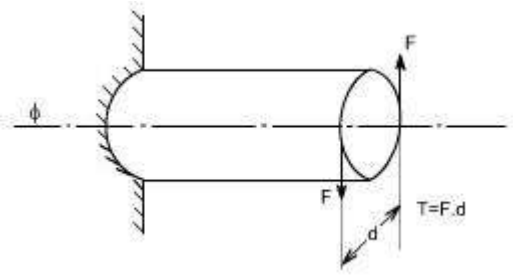

Effects of Torsion: The effects of a torsional load applied to a bar are

(i) To impart an angular displacement of one end cross – section with respect to the other end.

(ii) To setup shear stresses on any cross section of the bar perpendicular to its axis.

Assumption:

(i) The materiel is homogenous i.e of uniform elastic properties exists throughout the material.

(ii) The material is elastic, follows Hook's law, with shear stress proportional to shear strain.

(iii) The stress does not exceed the elastic limit.

(iv) The circular section remains circular (v) Cross section remain plane.

(vi) Cross section rotate as if rigid i.e. every diameter rotates through the same angle.

Consider now the solid circular shaft of radius R subjected to a torque T at one end, the other end being fixed Under the action of this torque a radial line at the free end of the shaft twists through an angle □ , point A moves to B, and AB subtends an angle ' □ ' at the fixed end. This is then the angle of distortion of the shaft i.e the shear strain.

Since angle in radius = arc / Radius arc

AB = R□

= L □ [since L and □ also constitute the arc AB]

Thus, □ = R□ / L (1)

From the definition of Modulus of rigidity or Modulus of elasticity in shear

$$G = \frac{\text{shear stress}(\tau)}{\text{shear strain}(\gamma)}$$

where γ is the shear stress set up at radius R.

Then $\frac{\tau}{G} = \gamma$

Equating the equations (1) and (2) we get $\frac{R\theta}{L} = \frac{\tau}{G}$

$\frac{\tau}{R} = \frac{G\theta}{L}\left(= \frac{\tau'}{r}\right)$ where τ 'is the shear stress at any radius r.

Stresses: Let us consider a small strip of radius r and thickness dr which is subjected to shear stress□'.

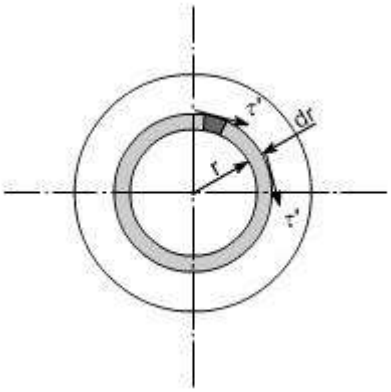

The force set up on each element

= stress x area

= □' x 2□ r dr (approximately)

This force will produce a moment or torque about the center axis of the shaft.

= □' . 2 □ r dr . r

= 2 □□□' . r^2. dr

$$T = \int_0^R 2\pi\tau' r^2 dr$$

The total torque T on the section, will be the sum of all the contributions.

Since □' is a function of r, because it varies with radius so writing down□' in terms of r from the equation (1).

$$\text{i.e } \tau' = \frac{G\theta . r}{L}$$

$$\text{we get } T = \int_0^R 2\pi \frac{G\theta}{L} . r^3 dr$$

$$T = \frac{2\pi G\theta}{L} \int_0^R r^3 dr$$

$$= \frac{2\pi G\theta}{L} . \left[\frac{R^4}{4}\right]_0^R$$

$$= \frac{G\theta}{L} . \frac{2\pi R^4}{4}$$

$$= \frac{G\theta}{L} . \frac{\pi R^4}{2}$$

$$= \frac{G\theta}{L} . \left[\frac{\pi d^4}{32}\right] \text{ now substituting } R = d/2$$

$$= \frac{G\theta}{L} . J$$

$$\text{since } \frac{\pi d^4}{32} = J \text{ the polar moment of inertia}$$

$$\text{or } \frac{T}{J} = \frac{G\theta}{L} \qquad \text{.....(2)}$$

$$\text{if we combine the equation no.(1) and (2) we get } \boxed{\frac{T}{J} = \frac{\tau'}{r} = \frac{G.\theta}{L}}$$

Where

T = applied external Torque, which is constant over Length L;

J = Polar moment of Inertia

$= \frac{\pi d^4}{32}$ for solid shaft

$= \frac{\pi(D^4 - d^4)}{32}$ for a hollow shaft.

[D = Outside diameter ; d = inside diameter]

G = Modules of rigidity (or Modulus of elasticity in shear) □ = It is the angle of twist in radians on a length L.

Tensional Stiffness: The tensional stiffness k is defined as the torque per radius twist i.e,

k = T /□= GJ / L

Power Transmitted by a shaft : If T is the applied Torque and □ is the angular velocity of the shaft, then the power transmitted by the shaft is

$$P = T.\omega = \frac{2\pi NT}{60} = \frac{2\pi NT}{60.10^3} kw$$

where N= rpm

TORSION OF HOLLOW SHAFTS:

From the torsion of solid shafts of circular x – section , it is seen that only the material at the outer surface of the shaft can be stressed to the limit assigned as an allowable working stresses. All of the material within the shaft will work at a lower stress and is not being used to full capacity. Thus, in these cases where the weight reduction is important, it is advantageous to use hollow shafts. In discussing the torsion of hollow shafts the same assumptions will be made as in the case of a solid shaft. The general torsion equation as we have applied in the case of torsion of solid shaft will hold good

$$\frac{T}{J} = \frac{\tau}{r} = \frac{G.\theta}{l}$$

For the hollow shaft

$J = \frac{\pi(D_0^4 - d_i^4)}{32}$ where D_0=Outside diameter

d_i=Inside diameter

Let $d_i = \frac{1}{2}.D_0$

$$\tau_{max^m}\Big|_{solid} = \frac{16T}{\pi D_0^3} \qquad (1)$$

$$\tau_{max^m}\Big|_{hollow} = \frac{T.D_0/2}{\frac{\pi}{32}(D_0^4 - d_i^4)}$$

$$= \frac{16T.D_0}{\pi D_0^4\left[1 - (d_i/D_0)^4\right]}$$

$$= \frac{16T}{\pi D_0^3\left[1 - (1/2)^4\right]} = 1.066.\frac{16T}{\pi D_0^3} \qquad (2)$$

Hence by examining the equation (1) and (2) it may be seen that the τ_{max} in the case of hollow shaft is 6.6% larger than in the case of a solid shaft having the same outside diameter.

Reduction in weight:

Considering a solid and hollow shafts of the same length 'l' and density 'ρ' with d_i = 1/2 D_o

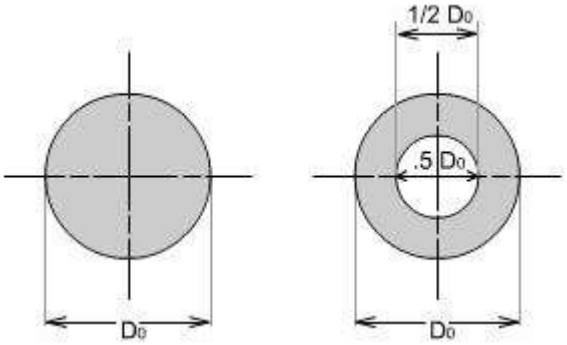

Weight of hollow shaft

$$= \left[\frac{\pi D_0^2}{4} - \frac{\pi (D_0/2)^2}{4}\right] l \times \rho$$

$$= \left[\frac{\pi D_0^2}{4} - \frac{\pi D_0^2}{16}\right] l \times \rho$$

$$= \frac{\pi D_0^2}{4}[1 - 1/4] l \times \rho$$

$$= 0.75 \frac{\pi D_0^2}{4} l \times \rho$$

$$\text{Weight of solid shaft} = \frac{\pi D_0^2}{4} l.\rho$$

$$\text{Reduction in weight} = (1 - 0.75) \frac{\pi D_0^2}{4} l \times \rho$$

$$= 0.25 \frac{\pi D_0^2}{4} l \times \rho$$

Hence the reduction in weight would be just 25%.

Illustrative Examples :

Problem 1

A stepped solid circular shaft is built in at its ends and subjected to an externally applied torque. T_0 at the shoulder as shown in the figure. Determine the angle of rotation θ_0 of the shoulder section where T_0 is applied ?

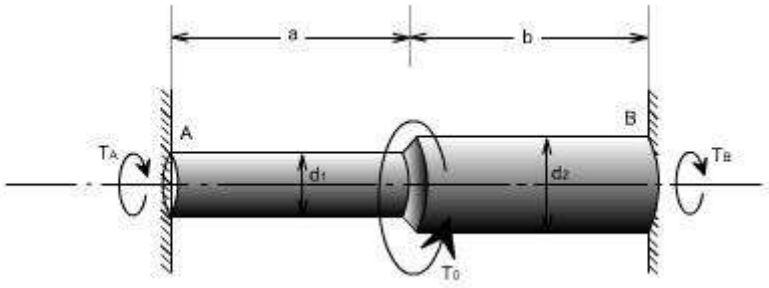

Module 3

Lecture 1- 4: Shear Force and Bending Moment

Concept of Shear Force and Bending moment in beams:

When the beam is loaded in some arbitrarily manner, the internal forces and moments are developed and the terms shear force and bending moments come into pictures which are helpful to analyze the beams further. Let us define these terms

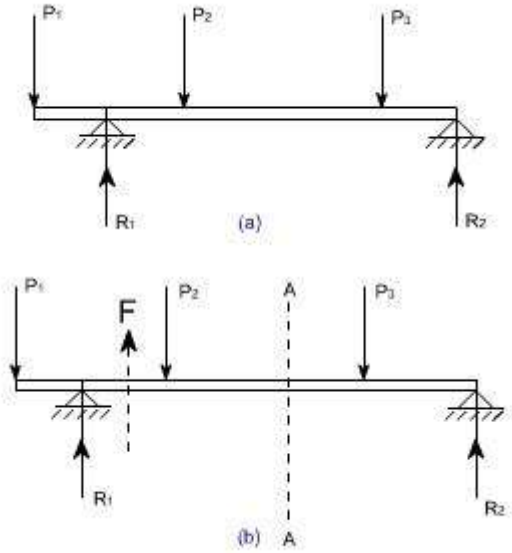

Fig 1

Now let us consider the beam as shown in fig 1(a) which is supporting the loads P_1, P_2, P_3 and is simply supported at two points creating the reactions R_1 and R_2 respectively. Now let us assume that the beam is to divided into or imagined to be cut into two portions at a section AA. Now let us assume that the resultant of loads and reactions to the left of AA is 'F' vertically upwards, and since the entire beam is to remain in equilibrium, thus the resultant of forces to the right of AA must also be F, acting downwards. This forces 'F' is as a shear force. The shearing force at any xsection of a beam represents the tendency for the portion of the beam to one side of the section to slide or shear laterally relative to the other portion.

Therefore, now we are in a position to define the shear force 'F' to as follows: At any x-section of a beam, the shear force 'F' is the algebraic sum of all the lateral components of the forces acting on either side of the x-section.

Sign Convention for Shear Force:

The usual sign conventions to be followed for the shear forces have been illustrated in figures 2 and 3.

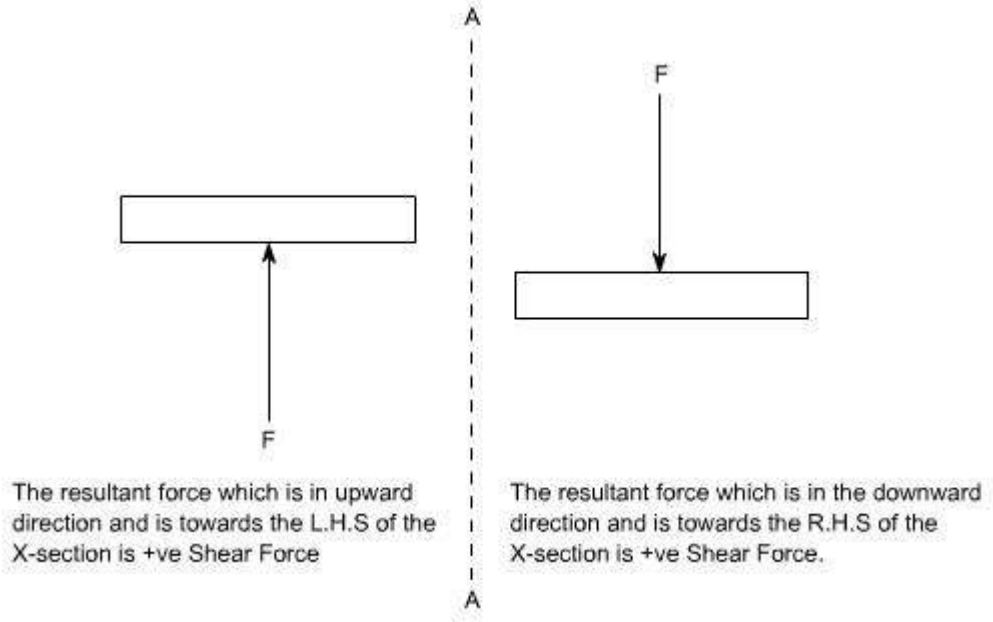

Fig 2: Positive Shear Force

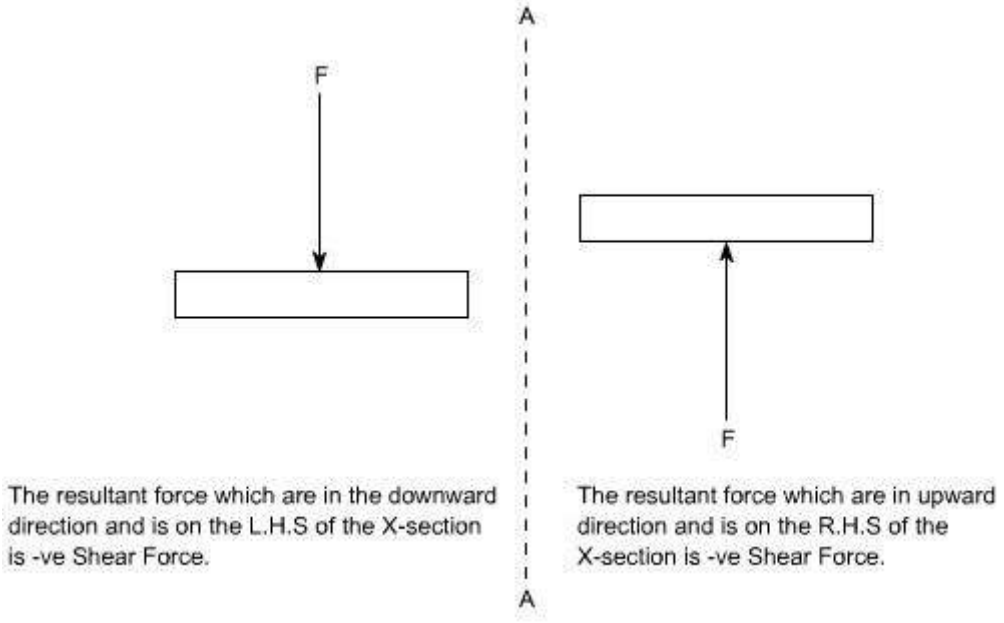

Fig 3: Negative Shear Force Bending

Moment:

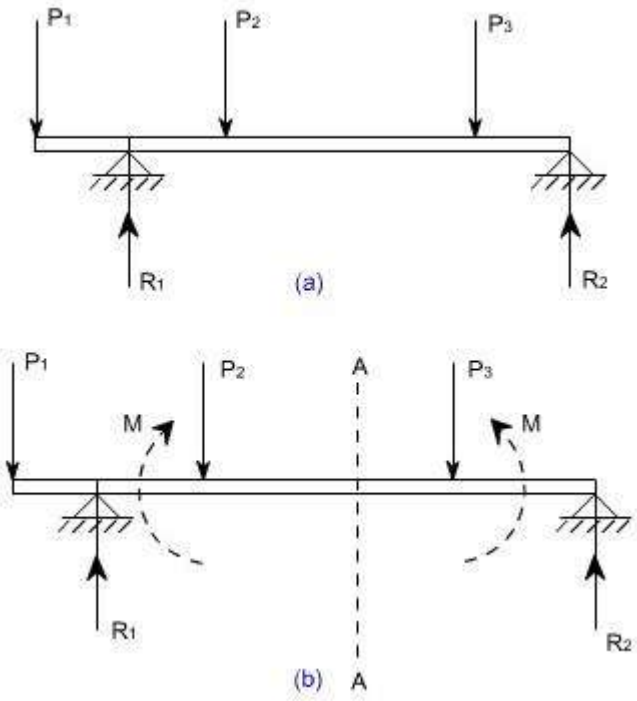

Fig 4

Let us again consider the beam which is simply supported at the two prints, carrying loads P_1, P_2 and P_3 and having the reactions R_1 and R_2 at the supports Fig 4. Now, let us imagine that the beam is cut into two potions at the x-section AA. In a similar

manner, as done for the case of shear force, if we say that the resultant moment about the section AA of all the loads and reactions to the left of the x-section at AA is M in C.W direction, then moment of forces to the right of x-section AA must be ‘M' in C.C.W. Then ‘M' is called as the Bending moment and is abbreviated as B.M. Now one can define the bending moment to be simply as the algebraic sum of the moments about an x-section of all the forces acting on either side of the section **Sign Conventions for the Bending Moment:**

For the bending moment, following sign conventions may be adopted as indicated in Fig 5 and Fig 6.

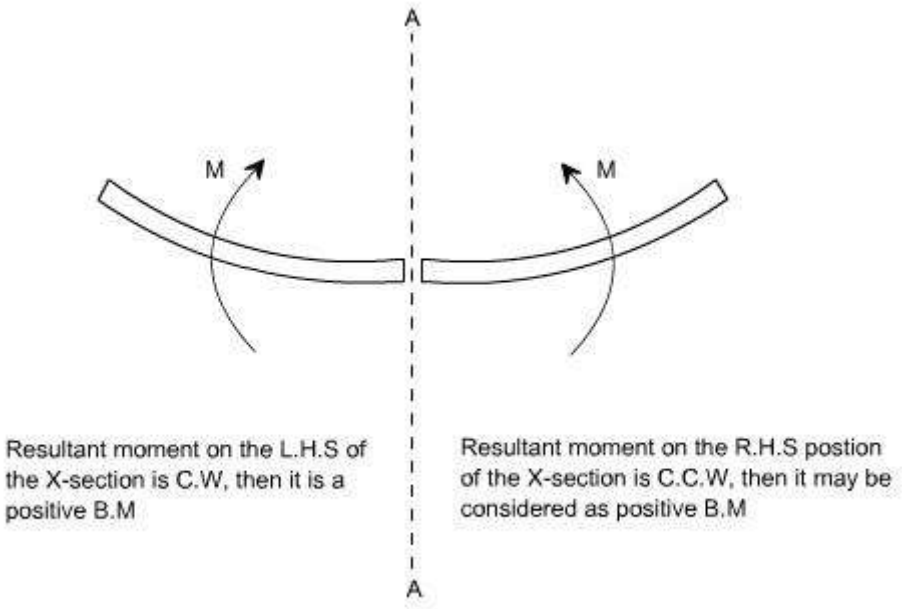

Fig 5: Positive Bending Moment

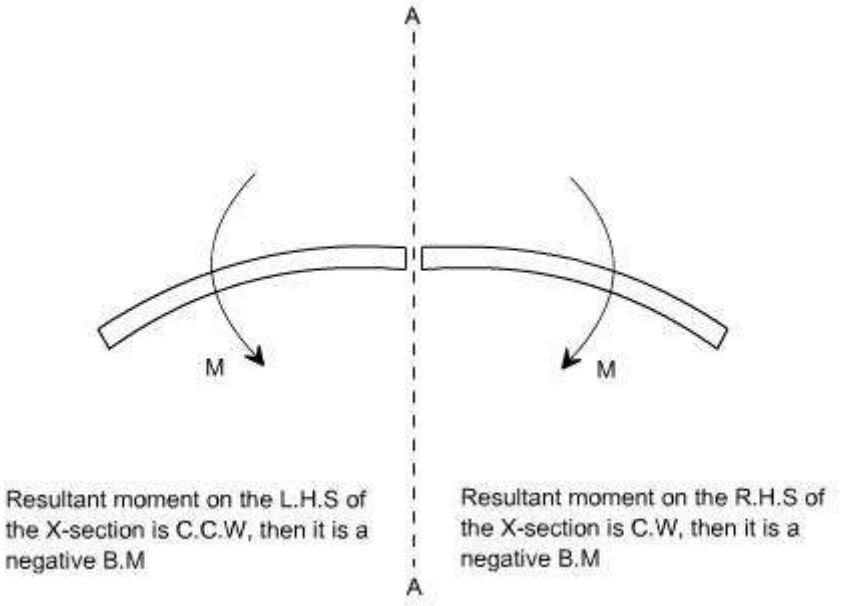

Fig 6: Negative Bending Moment

Some times, the terms ‘Sagging' and Hogging are generally used for the positive and negative bending moments respectively.

Bending Moment and Shear Force Diagrams:

The diagrams which illustrate the variations in B.M and S.F values along the length of the beam for any fixed loading conditions would be helpful to analyze the beam further. Thus, a shear force diagram is a graphical plot, which depicts how the internal shear force ‘F' varies along the length of beam. If x dentotes the length of the beam, then F is function x i.e. F(x).

Similarly a bending moment diagram is a graphical plot which depicts how the internal bending moment ‘M' varies along the length of the beam. Again M is a function x i.e. M(x).

Basic Relationship Between The Rate of Loading, Shear Force and Bending Moment:

The construction of the shear force diagram and bending moment diagrams is greatly simplified if the relationship among load, shear force and bending moment is established.

Let us consider a simply supported beam AB carrying a uniformly distributed load w/length. Let us imagine to cut a short slice of length dx cut out from this loaded beam at distance ‘x' from the origin ‘0'.

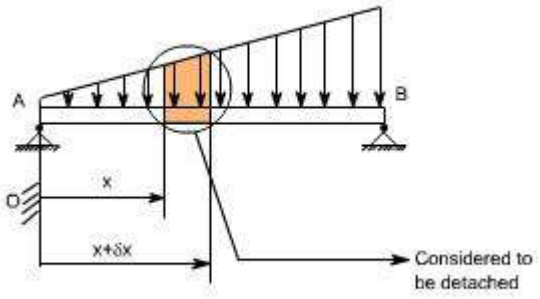

Let us detach this portion of the beam and draw its free body diagram.

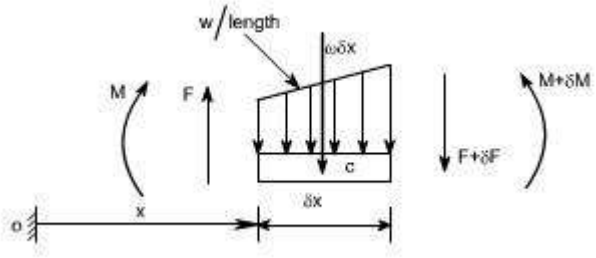

The forces acting on the free body diagram of the detached portion of this loaded beam are the following

- The shearing force F and F+ δF at the section x and x + δx respectively.
- The bending moment at the sections x and x + δx be M and M + dM respectively.
- Force due to external loading, if ‘w' is the mean rate of loading per unit length then the total loading on this slice of length δx is w. δx, which is approximately acting through the centre ‘c'. If the loading is assumed to be uniformly distributed then it would pass exactly through the centre ‘c'.

This small element must be in equilibrium under the action of these forces and couples. Now let us take the moments at the point ‘c'. Such that

$$M + F.\frac{\delta x}{2} + (F + \delta F).\frac{\delta x}{2} = M + \delta M$$

$$\Rightarrow F.\frac{\delta x}{2} + (F + \delta F).\frac{\delta x}{2} = \delta M$$

$$\Rightarrow F.\frac{\delta x}{2} + F.\frac{\delta x}{2} + \delta F.\frac{\delta x}{2} = \delta M \text{ [Neglecting the product of } \delta F \text{ and } \delta x \text{ being small quantities]}$$

$$\Rightarrow F.\delta x = \delta M$$

$$\Rightarrow F = \frac{\delta M}{\delta x}$$

Under the limits $\delta x \to 0$

$$\boxed{F = \frac{dM}{dx}} \qquad \ldots\ldots\ldots\ldots \quad (1)$$

Resolving the forces vertically we get

$$w.\delta x + (F + \delta F) = F$$

$$\Rightarrow w = -\frac{\delta F}{\delta x}$$

Under the limits $\delta x \to 0$

$$\Rightarrow w = -\frac{dF}{dx} \text{ or } -\frac{d}{dx}\left(\frac{dM}{dx}\right)$$

$$\boxed{w = -\frac{dF}{dx} = -\frac{d^2M}{dx^2}} \qquad \ldots\ldots\ldots\ldots (2)$$

Conclusions: From the above relations,the following important conclusions may be drawn

- From Equation (1), the area of the shear force diagram between any two points, from the basic calculus is the bending moment diagram

$$M = \int F.dx$$

- The slope of bending moment diagram is the shear force, thus

$$F = \frac{dM}{dx}$$

Thus, if F=0; the slope of the bending moment diagram is zero and the bending moment is therefore constant.'

- The maximum or minimum Bending moment occurs where $\frac{dM}{dx} = 0.$

The slope of the shear force diagram is equal to the magnitude of the intensity of the distributed loading at any position along the beam. The –ve sign is as a consequence of our particular choice of sign conventions

Procedure for drawing shear force and bending moment diagram:

Preamble:

The advantage of plotting a variation of shear force F and bending moment M in a beam as a function of ‘x' measured from one end of the beam is that it becomes easier to determine the maximum absolute value of shear force and bending moment.

Further, the determination of value of M as a function of ‘x' becomes of paramount importance so as to determine the value of deflection of beam subjected to a given loading.

Construction of shear force and bending moment diagrams:

A shear force diagram can be constructed from the loading diagram of the beam. In order to draw this, first the reactions must be determined always. Then the vertical components of forces and reactions are successively summed from the left end of the beam to preserve the mathematical sign conventions adopted. The shear at a section is simply equal to the sum of all the vertical forces to the left of the section. When the successive summation process is used, the shear force diagram should end up with the previously calculated shear (reaction at right end of the beam. No shear force acts through the beam just beyond the last vertical force or reaction. If the shear force diagram closes in this fashion, then it gives an important check on mathematical calculations.

The bending moment diagram is obtained by proceeding continuously along the length of beam from the left hand end and summing up the areas of shear force diagrams giving due regard to sign. The process of obtaining the moment diagram from the shear force diagram by summation is exactly the same as that for drawing shear force diagram from load diagram.

It may also be observed that a constant shear force produces a uniform change in the bending moment, resulting in straight line in the moment diagram. If no shear force exists along a certain portion of a beam, then it indicates that there is no change in moment takes place. It may also further observe that dm/dx= F therefore, from the fundamental theorem of calculus the maximum or minimum moment occurs where the shear is zero. In order to check the validity of the bending moment diagram, the terminal conditions for the moment must be satisfied. If the end is free or pinned, the computed sum must be equal to zero. If the end is built in, the moment computed by

the summation must be equal to the one calculated initially for the reaction. These conditions must always be satisfied.

Illustrative problems:

In the following sections some illustrative problems have been discussed so as to illustrate the procedure for drawing the shear force and bending moment diagrams

1. A cantilever of length carries a concentrated load 'W' at its free end.

Draw shear force and bending moment.

Solution:

At a section a distance x from free end consider the forces to the left, then F = -W (for all values of x) -ve sign means the shear force to the left of the x-section are in downward direction and therefore negative

Taking moments about the section gives (obviously to the left of the section)

M = -Wx (-ve sign means that the moment on the left hand side of the portion is in the anticlockwise direction and is therefore taken as –ve according to the sign convention) so that the maximum bending moment occurs at the fixed end i.e. M = -W l

From equilibrium consideration, the fixing moment applied at the fixed end is Wl and the reaction is W. the shear force and bending moment are shown as,

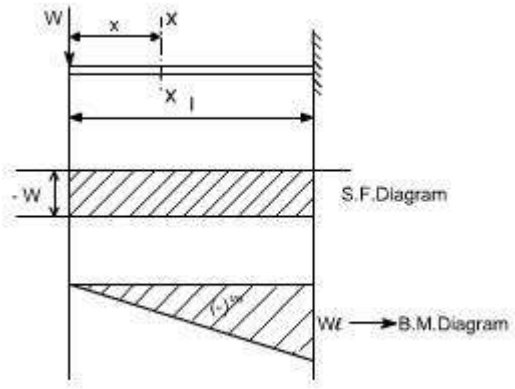

2. Simply supported beam subjected to a central load (i.e. load acting at the midway)

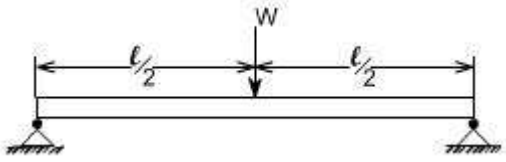

By symmetry the reactions at the two supports would be W/2 and W/2. now consider any section X-X from the left end then, the beam is under the action of following forces.

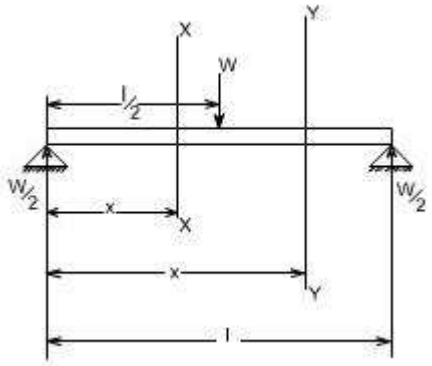

.So the shear force at any X-section would be = W/2 [Which is constant upto x < l/2] If we consider another section Y-Y which is beyond l/2 then

$S.F_{Y\text{-}Y} = \frac{W}{2} - W = \frac{-W}{2}$ for all values greater = l/2

Hence S.F diagram can be plotted as,

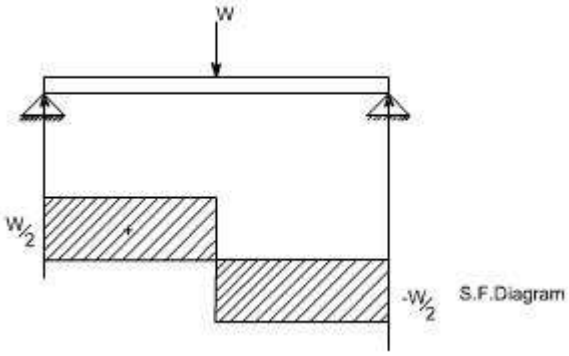

.For B.M diagram:

If we just take the moments to the left of the cross-section,

$B.M_{X\text{-}X} = \frac{W}{2} x$ for x lies between 0 and l/2

$B.M_{at\ x = \frac{l}{2}} = \frac{W}{2}\ \frac{l}{2}$ i.e B.M at x = 0

$= \frac{Wl}{4}$

$B.M_{Y\text{-}Y} = \frac{W}{2} x - W\left(x - \frac{l}{2}\right)$

Again

$= \frac{W}{2} x - Wx + \frac{Wl}{2}$

$= -\frac{W}{2} x + \frac{Wl}{2}$

$B.M_{at\ x = l} = -\frac{Wl}{2} + \frac{Wl}{2}$

$= 0$

Which when plotted will give a straight relation i.e.

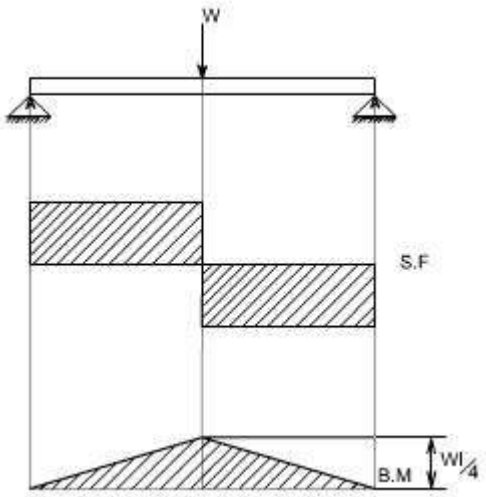

It may be observed that at the point of application of load there is an abrupt change in the shear force, at this point the B.M is maximum.

3. A cantilever beam subjected to U.d.L, draw S.F and B.M diagram.

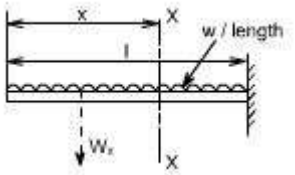

Here the cantilever beam is subjected to a uniformly distributed load whose intensity is given w / length.

Consider any cross-section XX which is at a distance of x from the free end. If we just take the resultant of all the forces on the left of the X-section, then $S.F_{xx} = -Wx$ for all values of 'x'. **---------- (1)**

$S.F_{xx} = 0$

$S.F_{xx \text{ at } x=1} = -Wl$

So if we just plot the equation No. (1), then it will give a straight line relation. Bending Moment at X-X is obtained by treating the load to the left of X-X as a concentrated load of the same value acting through the centre of gravity.

Therefore, the bending moment at any cross-section X-X is

$$B.M_{x\text{-}x} = - W \times \frac{x}{2}$$

$$= - W\frac{x^2}{2}$$

The above equation is a quadratic in x, when B.M is plotted against x this will produces a parabolic variation.

The extreme values of this would be at x = 0 and x = l

$$B.M_{at\ x=l} = -\frac{Wl^2}{2}$$

$$= \frac{Wl}{2} - Wx$$

Hence S.F and B.M diagram can be plotted as follows:

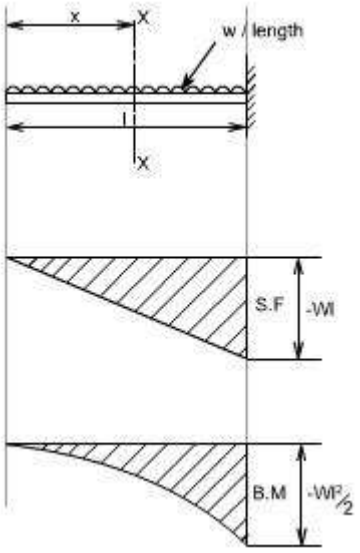

4. Simply supported beam subjected to a uniformly distributed load [U.D.L].

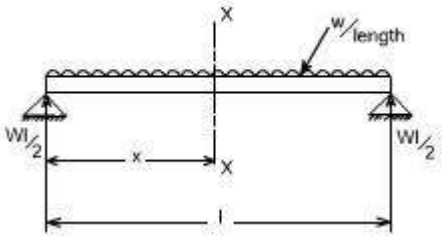

The total load carried by the span would be

= intensity of loading x length

= w x l

By symmetry the reactions at the end supports are each wl/2

If x is the distance of the section considered from the left hand end of the beam. S.F at any X-section X-X is

$$= \frac{Wl}{2} - Wx$$

$$= W\left(\frac{l}{2} - x\right)$$

Giving a straight relation, having a slope equal to the rate of loading or intensity of the loading.

$S.F_{at\ x=0} = \frac{wl}{2} - wx$

so at

$S.F_{at\ x=\frac{l}{2}} = 0$ hence the S.F is zero at the centre

$S.F_{at\ x=l} = -\frac{Wl}{2}$

The bending moment at the section x is found by treating the distributed load as acting at its centre of gravity, which at a distance of x/2 from the section

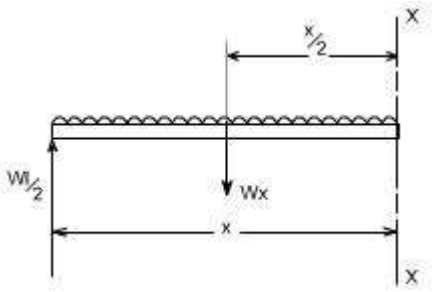

$B.M_{X\text{-}X} = \frac{Wl}{2}x - Wx.\frac{x}{2}$

so the

$= W.\frac{x}{2}(l - 2)$ .....(2)

$B.M_{at\ x=0} = 0$

$B.M_{at\ x=l} = 0$

$B.M\Big|_{at\ x=l} = -\frac{Wl^2}{8}$

So the equation (2) when plotted against x gives rise to a parabolic curve and the shear force and bending moment can be drawn in the following way will appear as follows:

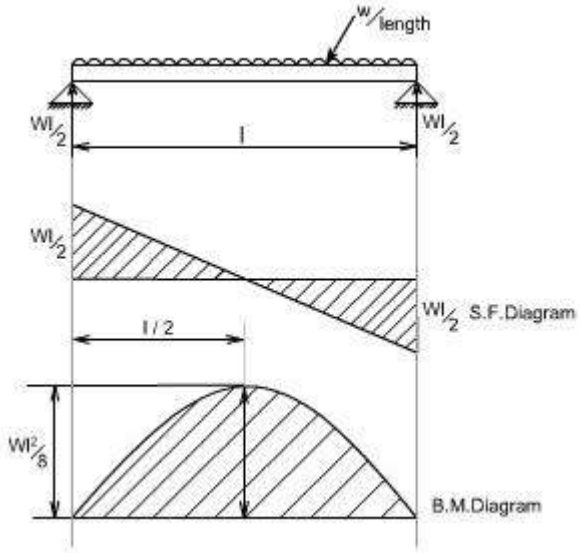

Module 3

Lecture 5-8: Pure Bending

Loading restrictions:

As we are aware of the fact internal reactions developed on any cross-section of a beam may consists of a resultant normal force, a resultant shear force and a resultant couple. In order to ensure that the bending effects alone are investigated, we shall put a constraint on the loading such that the resultant normal and the resultant shear forces are zero on any cross-section perpendicular to the longitudinal axis of the member, That means F = 0

since $\frac{dM}{dX} = F = 0$ or M = constant.

Thus, the zero shear force means that the bending moment is constant or the bending is same at every cross-section of the beam. Such a situation may be visualized or envisaged when the beam or some portion of the beam, as been loaded only by pure couples at its ends. It must be recalled that the couples are assumed to be loaded in the plane of symmetry.

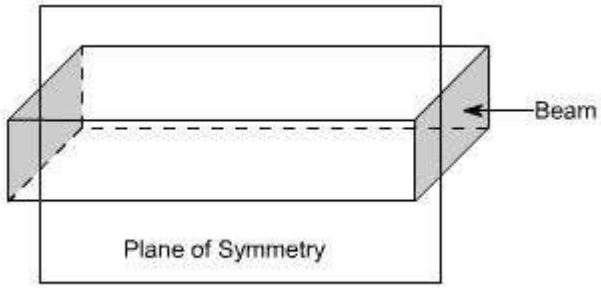

Fig (1)

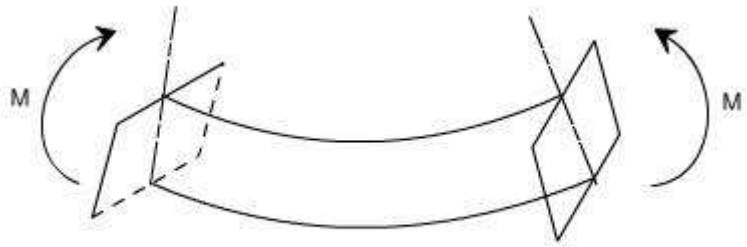

Fig (2)

When a member is loaded in such a fashion it is said to be in **pure bending.** The examples of pure bending have been indicated in EX 1and EX 2 as shown below :

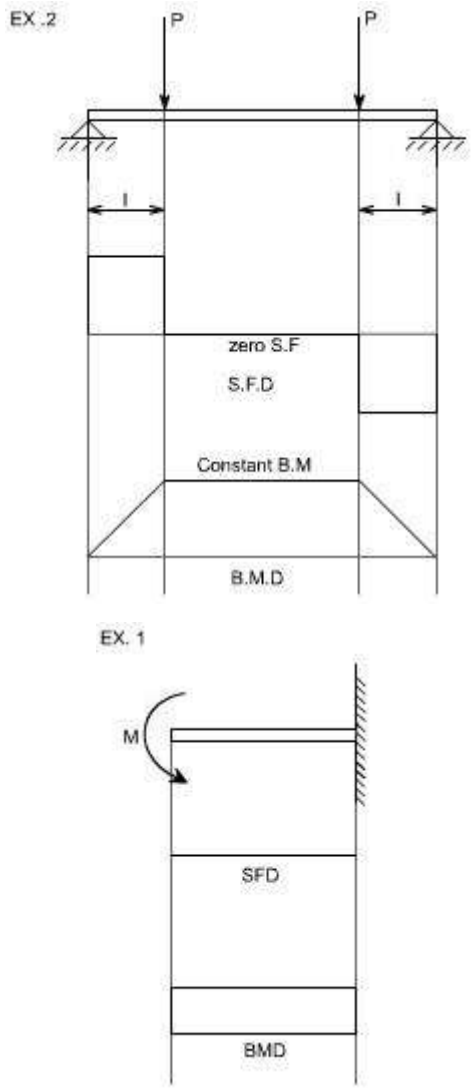

When a beam is subjected to pure bending are loaded by the couples at the ends, certain cross-section gets deformed and we shall have to make out the conclusion that,

1. Plane sections originally perpendicular to longitudinal axis of the beam remain plane and perpendicular to the longitudinal axis even after bending , i.e. the crosssection A'E', B'F' (refer Fig 1(a)) do not get warped or curved.

2. In the deformed section, the planes of this cross-section have a common intersection i.e. any time originally parallel to the longitudinal axis of the beam becomes an arc of circle.

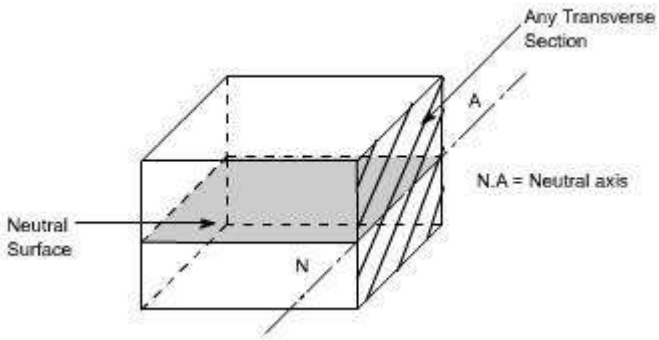

We know that when a beam is under bending the fibres at the top will be lengthened while at the bottom will be shortened provided the bending moment M acts at the ends. In between these there are some fibres which remain unchanged in length that is they are not strained, that is they do not carry any stress. The plane containing such fibres is called neutral surface.

The line of intersection between the neutral surface and the transverse exploratory section is called the neutral axisNeutral axis **(N A)** .

Bending Stresses in Beams or Derivation of Elastic Flexural formula :

In order to compute the value of bending stresses developed in a loaded beam, let us consider the two cross-sections of a beam**HE** and **GF** , originally parallel as shown in fig 1(a).when the beam is to bend it is assumed that these sections remain parallel i.e.**H'E'** and **G'F'** , the final position of the sections, are still straight lines, they then subtend some angle .

Consider now fiber AB in the material, at adistance y from the N.A, when the beam bends this will stretch to A'B'

Therefore,

$$\text{strain in fibre } AB = \frac{\text{change in length}}{\text{orginal length}}$$

$$= \frac{A'B' - AB}{AB} \qquad \text{But } AB = CD \text{ and } CD = C'D'$$

refer to fig1(a) and fig1(b)

$$\therefore \text{strain} = \frac{A'B' - C'D'}{C'D'}$$

Since CD and C'D' are on the neutral axis and it is assumed that the Stress on the neutral axis zero. Therefore, there won't be any strain on the neutral axis

$$= \frac{(R+y)\theta - R\theta}{R\theta} = \frac{R\theta + y\theta - R\theta}{R\theta} = \frac{y}{R}$$

However $\frac{\text{stress}}{\text{strain}} = E$ where E = Young's Modulus of elasticity

Therefore, equating the two strains as obtained from the two relations i.e,

$$\frac{\sigma}{E} = \frac{y}{R} \text{ or } \frac{\sigma}{y} = \frac{E}{R} \qquad \text{.....(1)}$$

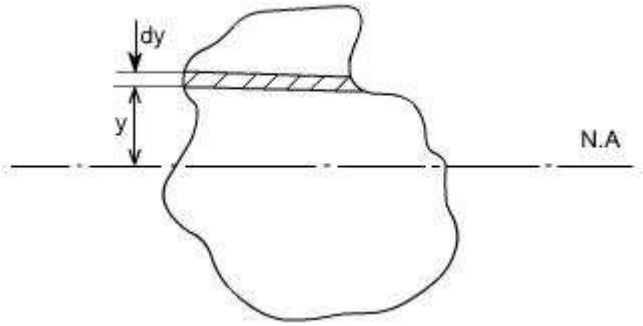

Consider any arbitrary a cross-section of beam, as shown above now the strain on a fibre at a distance 'y' from the N.A, is given by the expression

$$\sigma = \frac{E}{R} y$$

if the shaded strip is of area 'dA'

then the force on the strip is

$$F = \sigma\, \delta A = \frac{E}{R} y\, \delta A$$

Moment about the neutral axis would be $= F.y = \frac{E}{R} y^2 \delta A$

The toatl moment for the whole cross-section is therefore equal to

$$M = \sum \frac{E}{R} y^2\ \delta A = \frac{E}{R} \sum y^2 \delta A$$

Now the term $\sum y^2 \delta A$ is the property of the material and is called as a second moment of area of the cross-section and is denoted by a symbol I.

Therefore

$$M = \frac{E}{R} I \qquad \text{.....(2)}$$

combining equation 1 and 2 we get

$$\boxed{\frac{\sigma}{y} = \frac{M}{T} = \frac{E}{R}}$$

This equation is known as the Bending Theory Equation. The above proof has involved the assumption of pure bending without any shear force being present.

Therefore this termed as the pure bending equation. This equation gives distribution of stresses which are normal to cross-section i.e. in x-direction.

Section Modulus:

From simple bending theory equation, the maximum stress obtained in any crosssection is given as

$$\sigma_{max^m} = \frac{M}{I} y_{max^m}$$

For any given allowable stress the maximum moment which can be accepted by a particular shape of cross-section is therefore

$$M = \frac{I}{y_{max^m}} \sigma_{max^m}$$

For ready comparison of the strength of various beam cross-section this relationship is some times written in the form

$M = Z \sigma_{max^m}$ where $Z = \frac{I}{y_{max^m}}$ **Is termed as section modulus**

The higher value of Z for a particular cross-section, the higher the bending moment which it can withstand for a given maximum stress.

Theorems to determine second moment of area: There are two theorems which are helpful to determine the value of second moment of area, which is required to be used while solving the simple bending theory equation.

Second Moment of Area :

Taking an analogy from the mass moment of inertia, the second moment of area is defined as the summation of areas times the distance squared from a fixed axis. (This property arised while we were driving bending theory equation). This is also known as the moment of inertia. An alternative name given to this is second moment of area, because the first moment being the sum of areas times their distance from a given axis and the second moment being the square of the distance or $\int y^2 \, dA$.

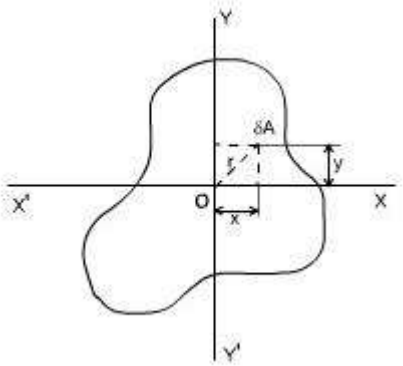

Consider any cross-section having small element of area d A then by the definition I_x(Mass Moment of Inertia about x-axis) = $\int y^2 \, dA$ and I_y(Mass Moment of Inertia about y-axis) = $\int x^2 \, dA$

Now the moment of inertia about an axis through 'O' and perpendicular to the plane of figure is called the polar moment of inertia. (The polar moment of inertia is also the area moment of inertia).

i.e,

J = polar moment of inertia

$$= \int r^2 dA$$

$$= \int (x^2 + y^2) dA$$

$$= \int x^2 dA + \int y^2 dA$$

$$= I_X + I_Y$$

$$\text{or } J = I_X + I_Y \qquad \ldots\ldots\ldots (1)$$

The relation (1) is known as the **perpendicular axis theorem** and may be stated as follows:

The sum of the Moment of Inertia about any two axes in the plane is equal to the moment of inertia about an axis perpendicular to the plane, the three axes being concurrent, i.e, the three axes exist together.

CIRCULAR SECTION :

For a circular x-section, the polar moment of inertia may be computed in the following manner

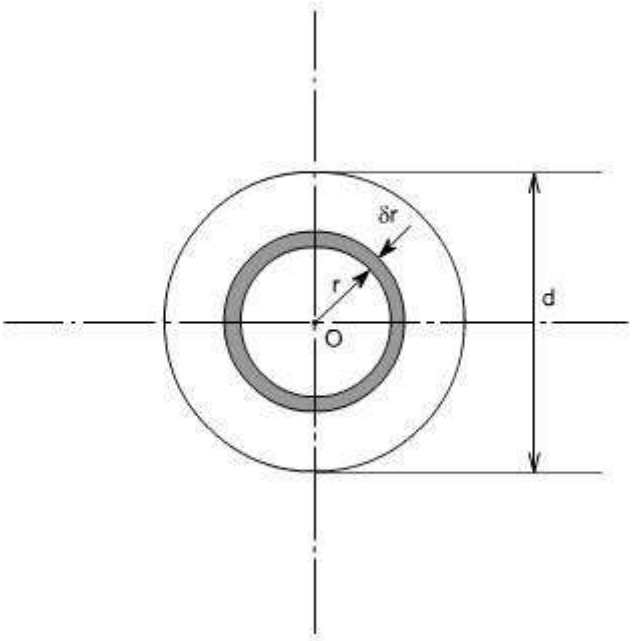

Consider any circular strip of thickness r located at a radius 'r'.

Than the area of the circular strip would be dA = 2 r. r

$J = \int r^2 dA$

Taking the limits of intergration from 0 to d/2

$$J = \int_0^{\frac{d}{2}} r^2 2\pi r \delta r$$

$$= 2\pi \int_0^{\frac{d}{2}} r^3 \delta r$$

$$J = 2\pi \left[\frac{r^4}{4}\right]_0^{\frac{d}{2}} = \frac{\pi d^4}{32}$$

however,by perpendicular axistheorem

$J = I_x + I_y$

But for the circular cross-section ,the I_x and I_y are both equal being moment of inertia about a diameter

$$I_{dia} = \frac{1}{2} J$$

$$I_{dia} = \frac{\pi d^4}{64}$$

for a hollow circular sectionof diameter D and d,

thevaluesof J andI are definedas

$$J = \frac{\pi(D^4 - d^4)}{32}$$

Thus $$I = \frac{\pi(D^4 - d^4)}{64}$$

Parallel Axis Theorem:

The moment of inertia about any axis is equal to the moment of inertia about a parallel axis through the centroid plus the area times the square of the distance between the axes.

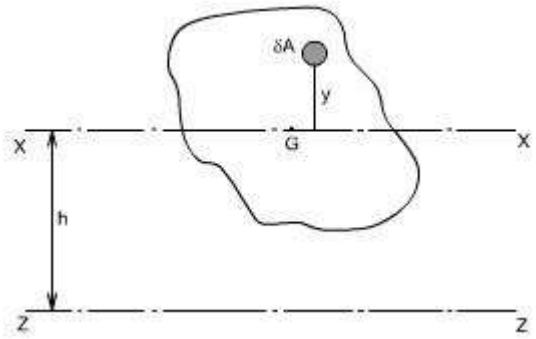

If ‘ZZ' is any axis in the plane of cross-section and ‘XX' is a parallel axis through the centroid G, of the cross-section, then

$I_z = \int (y+h)^2 \, dA$ by definition (moment of inertia about an axis ZZ)

$= \int (+2yh + h^2) \, dA$

$= \int y^2 dA + h^2 \int dA + 2h \int y dA$

Since $\int y dA = 0$

$= \int y^2 dA + h^2 \int dA$

$= \int y^2 dA + h^2 A$

$I_z = I_x + Ah^2$ $\quad I_x = I_G$ (since cross-section axes also pass through G)

Where A = Total area of the section

Rectangular Section:

For a rectangular x-section of the beam, the second moment of area may be computed as below :

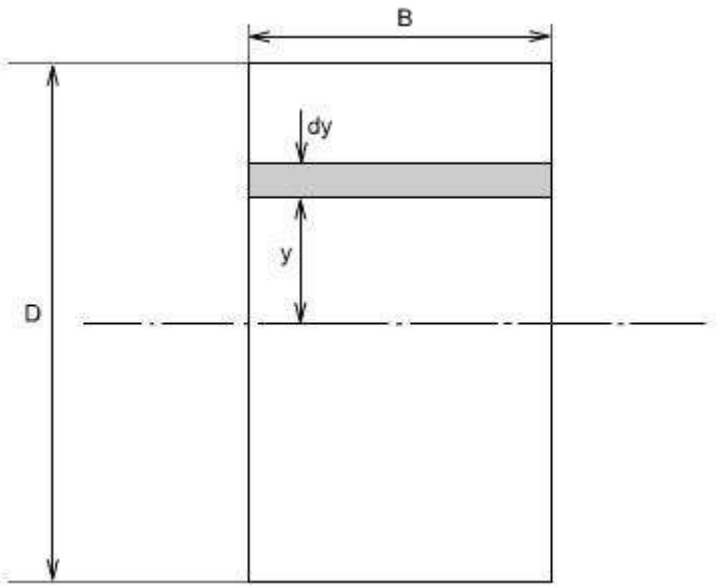

Consider the rectangular beam cross-section as shown above and an element of area **dA** , thickness **dy** , breadth **B** located at a distance **y** from the neutral axis, which by symmetry passes through the centre of section. The second moment of area **I** as defined earlier would be

$$I_{N.A} = \int y^2 dA$$

Thus, for the rectangular section the second moment of area about the neutral axis i.e., an axis through the centre is given by

$$I_{N.A} = \int_{\frac{-D}{2}}^{\frac{D}{2}} y^2 (B\, dy)$$

$$= B \int_{\frac{-D}{2}}^{\frac{D}{2}} y^2 dy$$

$$= B \left[\frac{y^3}{3}\right]_{\frac{D}{2}}^{\frac{-D}{2}}$$

$$= \frac{B}{3}\left[\frac{D^3}{8} - \left(\frac{-D^3}{8}\right)\right]$$

$$= \frac{B}{3}\left[\frac{D^3}{8} + \frac{D^3}{8}\right]$$

$$I_{N.A} = \frac{BD^3}{12}$$

Similarly, the second moment of area of the rectangular section about an axis through the lower edge of the section would be found using the same procedure but with integral limits of **0** to **D** .

Therefore $$I = B\left[\frac{y^3}{3}\right]_0^D = \frac{BD^3}{3}$$

These standards formulas prove very convenient in the determination of I_{NA} for build up sections which can be conveniently divided into rectangles. For instance if we just want to find out the Moment of Inertia of an I - section, then we can use the above relation.

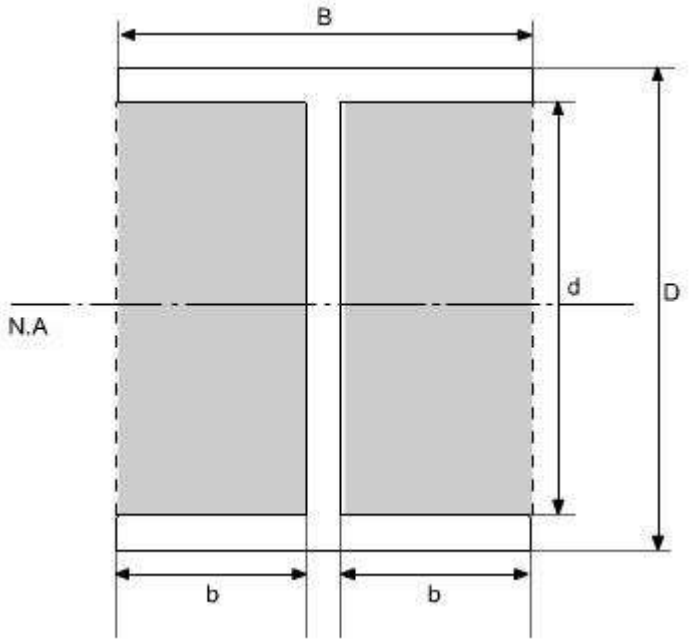

$$I_{N.A} = I_{\text{of dotted rectangle}} - I_{\text{of shaded portion}}$$

$$\therefore I_{N.A} = \frac{BD^3}{12} - 2\left(\frac{bd^3}{12}\right)$$

$$I_{N.A} = \frac{BD^3}{12} - \frac{bd^3}{6}$$

Use of Flexure Formula:

Illustrative Problems:

An I - section girder, 200mm wide by 300 mm depth flange and web of thickness is 20 mm is used as simply supported beam for a span of 7 m. The girder carries a distributed load of 5 KN /m and a concentrated load of 20 KN at mid-span.

Determine the

(i). The second moment of area of the cross-section of the girder

(ii). The maximum stress set up.

Solution:

The second moment of area of the cross-section can be determained as follows :

For sections with symmetry about the neutral axis, use can be made of standard I value for a rectangle about an axis through centroid i.e. (bd 3)/12. The section can thus be divided into convenient rectangles for each of which the neutral axis passes through the centroid. Example in the case enclosing the girder by a rectangle

$$I_{girder} = I_{rectangle} - I_{shaded\ portion}$$

$$= \left[\frac{200 \times 300^3}{12}\right] 10^{-12} - 2\left[\frac{90 \times 260^3}{12}\right] 10^{-12}$$

$$= (4.5 - 2.64)10^{-4}$$

$$= 1.86 \times 10^{-4}\ m^4$$

The maximum stress may be found from the simple bending theory by equation

$$\frac{\sigma}{y} = \frac{M}{I} = \frac{E}{R}$$

i.e.

$$\sigma_{max^m} = \frac{M_{max^m}}{I}\ y_{max^m}$$

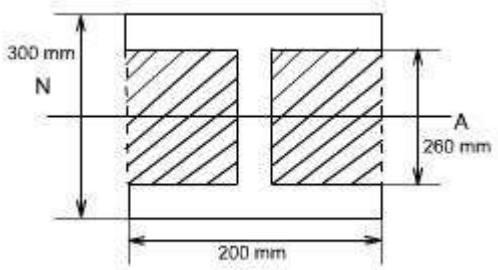

<u>Computation of Bending Moment:</u>

In this case the loading of the beam is of two types

(a) Uniformly distributed load

(b) Concentrated Load

In order to obtain the maximum bending moment the technique will be to consider each loading on the beam separately and get the bending moment due to it as if no other forces acting on the structure and then superimpose the two results.

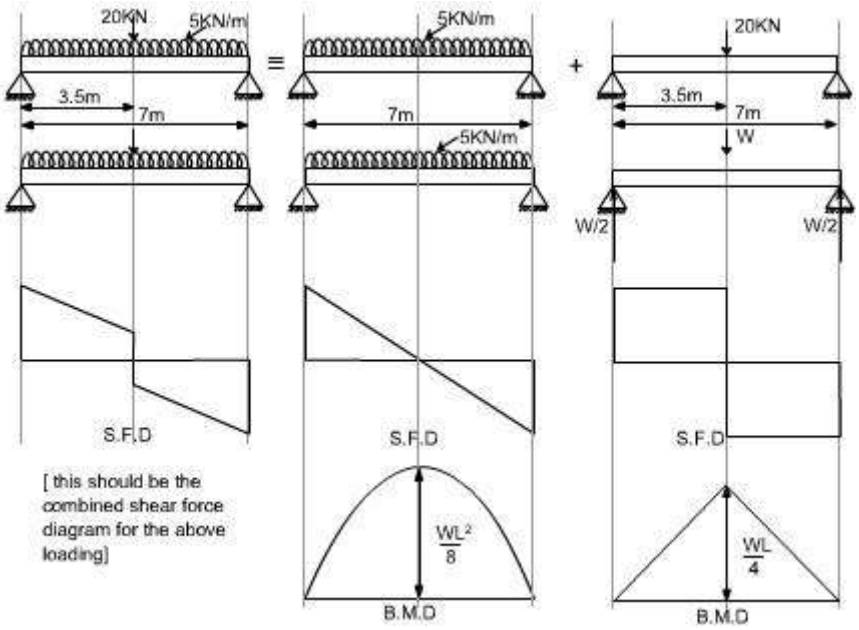

Hence

$$M_{max^m} = \frac{wL}{4} + \frac{wL^2}{8}$$

$$= \frac{20 \times 10^3 \times 7}{4} + \frac{5 \times 10^3 \times 7^2}{8}$$

$$= (35.0 + 30.63)10^3$$

$$= 65.63 \text{ kNm}$$

$$\sigma_{max^m} = \frac{M_{max^m}}{I} y_{max^m}$$

$$= \frac{65.63 \times 10^3 \times 150 \times 10^3}{1.06 \times 10^{-4}}$$

$$\sigma_{max^m} = 51.8 \text{ MN/m}^2$$

Shearing Stresses in Beams

All the theory which has been discussed earlier, while we discussed the bending stresses in beams was for the case of pure bending i.e. constant bending moment acts along the entire length of the beam.

Module 3

Lecture 9- 12: Deflection of Beams

Deflection of Beams Introduction:

In all practical engineering applications, when we use the different components, normally we have to operate them within the certain limits i.e. the constraints are placed on the performance and behavior of the components. For instance we say that the particular component is supposed to operate within this value of stress and the deflection of the component should not exceed beyond a particular value.

In some problems the maximum stress however, may not be a strict or severe condition but there may be the deflection which is the more rigid condition under operation. It is obvious therefore to study the methods by which we can predict the deflection of members under lateral loads or transverse loads, since it is this form of loading which will generally produce the greatest deflection of beams.

Assumption: The following assumptions are undertaken in order to derive a differential equation of elastic curve for the loaded beam

1. Stress is proportional to strain i.e. hooks law applies. Thus, the equation is valid only for beams that are not stressed beyond the elastic limit.
2. The curvature is always small.
3. Any deflection resulting from the shear deformation of the material or shear stresses is neglected.

It can be shown that the deflections due to shear deformations are usually small and hence can be ignored.

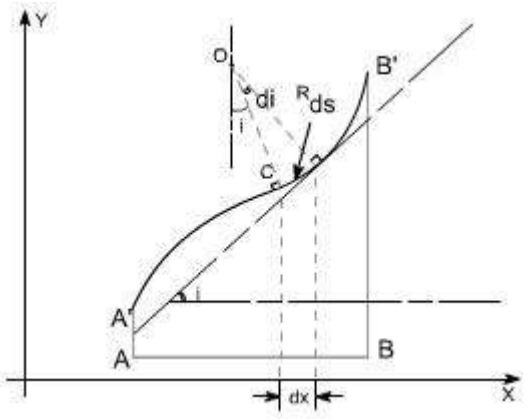

Consider a beam AB which is initially straight and horizontal when unloaded. If under the action of loads the beam deflect to a position A'B' under load or infact we say that the axis of the beam bends to a shape A'B'. It is customary to call A'B' the curved axis of the beam as the elastic line or deflection curve.

In the case of a beam bent by transverse loads acting in a plane of symmetry, the bending moment M varies along the length of the beam and we represent the variation of bending moment in B.M diagram. Futher, it is assumed that the simple bending theory equation holds good.

$$\boxed{\frac{\sigma}{y} = \frac{M}{I} = \frac{E}{R}}$$

If we look at the elastic line or the deflection curve, this is obvious that the curvature at every point is different; hence the slope is different at different points.

To express the deflected shape of the beam in rectangular co-ordinates let us take two axes x and y, x-axis coincide with the original straight axis of the beam and the y – axis shows the deflection.

Futher,let us consider an element ds of the deflected beam. At the ends of this element let us construct the normal which intersect at point O denoting the angle between these two normal be di

But for the deflected shape of the beam the slope i at any point C is defined,

$\tan i = \frac{dy}{dx}$ .....(1) or $i = \frac{dy}{dx}$ Assuming $\tan i = i$

Futher

$ds = R\,di$

however,

$ds = dx$ [usually for small curvature]

Hence

$ds = dx = R\,di$

or $\boxed{\frac{di}{dx} = \frac{1}{R}}$

substituting the value of i, one get

$\frac{d}{dx}\left(\frac{dy}{dx}\right) = \frac{1}{R}$ or $\frac{d^2y}{dx^2} = \frac{1}{R}$

From the simple bending theory

$\frac{M}{I} = \frac{E}{R}$ or $M = \frac{EI}{R}$

so the basic differential equation governing the deflection of beam sis

$$\boxed{M = EI\frac{d^2y}{dx^2}}$$

This is the differential equation of the elastic line for a beam subjected to bending in the plane of symmetry. Its solution y = f(x) defines the shape of the elastic line or the deflection curve as it is frequently called.

Relationship between shear force, bending moment and deflection: The relationship among shear force,bending moment and deflection of the beam may be obtained as

Differentiating the equation as derived

$$\frac{dM}{dx}=EI\frac{d^3y}{dx^3} \quad \text{Recalling } \frac{dM}{dx}=F$$

Thus,

$$F=EI\frac{d^3y}{dx^3}$$

Therefore, the above expression represents the shear force whereas rate of intensity of loading can also be found out by differentiating the expression for shear force

$$\text{i.e } w = -\frac{dF}{dx}$$

$$w = -EI\frac{d^4y}{dx^4}$$

Therefore if 'y' is the deflection of the loaded beam,
then the following important relations can be arrived at

$$\boxed{\text{slope} = \frac{dy}{dx}}$$

$$\boxed{B.M = EI\frac{d^2y}{dx^2}}$$

$$\boxed{\text{Shear force} = EI\frac{d^3y}{dx^3}}$$

$$\boxed{\text{load distribution} = EI\frac{d^4y}{dx^4}}$$

Methods for finding the deflection: The deflection of the loaded beam can be obtained various methods.The one of the method for finding the deflection of the beam is the direct integration method, i.e. the method using the differential equation which we have derived.

Direct integration method: The governing differential equation is defined as

$$M = EI\frac{d^2y}{dx^2} \quad \text{or} \quad \frac{M}{EI} = \frac{d^2y}{dx^2}$$

on integrating one get,

$$\frac{dy}{dx} = \int\frac{M}{EI}dx + A \text{ ---- this equation gives the slope of the loaded beam.}$$

Integrate once again to get the deflection.

$$y = \int\int\frac{M}{EI}dx + Ax + B$$

Where A and B are constants of integration to be evaluated from the known conditions of slope and deflections for the particular value of x.

Illustrative examples : let us consider few illustrative examples to have a familiarty with the direct integration method

Case 1: Cantilever Beam with Concentrated Load at the end:- A cantilever beam is subjected to a concentrated load W at the free end, it is required to determine the deflection of the beam

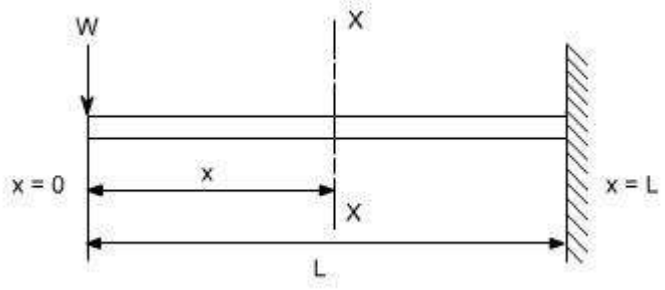

In order to solve this problem, consider any X-section X-X located at a distance x from the left end or the reference, and write down the expressions for the shear force abd the bending moment

$S.F|_{x-x} = -W$

$B.M|_{x-x} = -W.x$

Therefore $M|_{x-x} = -W.x$

the governing equation $\frac{M}{EI} = \frac{d^2y}{dx^2}$

substituting the value of M interms of x then integrating the equation one get

$$\frac{M}{EI} = \frac{d^2y}{dx^2}$$

$$\frac{d^2y}{dx^2} = -\frac{Wx}{EI}$$

$$\int \frac{d^2y}{dx^2} = \int -\frac{Wx}{EI} dx$$

$$\frac{dy}{dx} = -\frac{Wx^2}{2EI} + A$$

Integrating once more,

$$\int \frac{dy}{dx} = \int -\frac{Wx^2}{2EI} dx + \int A\, dx$$

$$y = -\frac{Wx^3}{6EI} + Ax + B$$

The constants A and B are required to be found out by utilizing the boundary conditions as defined below

i.e at x= L ; y= 0 ---------- (1) at

x = L ; dy/dx = 0 ---------- (2)

Utilizing the second condition, the value of constant A is obtained as

$$A = \frac{Wl^2}{2EI}$$

While employing the first condition yields

$$y = -\frac{WL^3}{6EI} + AL + B$$

$$B = \frac{WL^3}{6EI} - AL$$

$$= \frac{WL^3}{6EI} - \frac{WL^3}{2EI}$$

$$= \frac{WL^3 - 3WL^3}{6EI} = -\frac{2WL^3}{6EI}$$

$$B = -\frac{WL^3}{3EI}$$

Substituting the values of A and B we get

$$y = \frac{1}{EI}\left[-\frac{Wx^3}{6EI} + \frac{WL^2x}{2EI} - \frac{WL^3}{3EI}\right]$$

The slope as well as the deflection would be maximum at the free end hence putting x=0 we get,

$$\boxed{y_{max} = -\frac{WL^3}{3EI}}$$

$$\boxed{(Slope)_{max}m = +\frac{WL^2}{2EI}}$$

Case 2: A Cantilever with Uniformly distributed Loads:- In this case the cantilever beam is subjected to U.d.l with rate of intensity varying w / length. The same procedure can also be adopted in this case

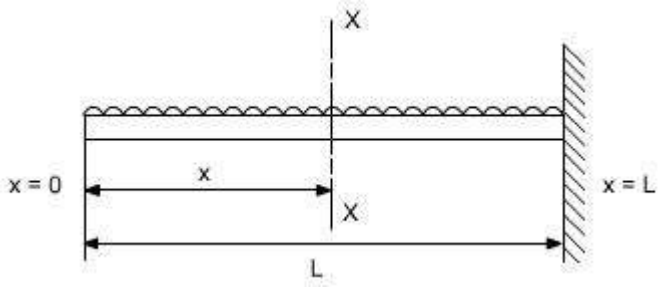

$$S.F\big|_{x-x} = -w$$

$$B.M\big|_{x-x} = -w.x.\frac{x}{2} = w\left(\frac{x^2}{2}\right)$$

$$\frac{M}{EI} = \frac{d^2y}{dx^2}$$

$$\frac{d^2y}{dx^2} = -\frac{wx^2}{2EI}$$

$$\int\frac{d^2y}{dx^2} = \int -\frac{wx^2}{2EI}dx$$

$$\frac{dy}{dx} = -\frac{wx^3}{6EI} + A$$

$$\int\frac{dy}{dx} = \int -\frac{wx^3}{6EI}dx + \int A\,dx$$

$$y = -\frac{wx^4}{24EI} + Ax + B$$

Boundary conditions relevant to the problem are as follows:

1. At x = L; y = 0

2. At x= L; dy/dx = 0

The second boundary conditions yields

$$A = +\frac{wx^3}{6EI}$$

whereas the first boundary conditions yields

$$B = \frac{wL^4}{24EI} - \frac{wL^4}{6EI}$$

$$B = -\frac{wL^4}{8EI}$$

$$\text{Thus, } y = \frac{1}{EI}\left[-\frac{wx^4}{24} + \frac{wL^3x}{6} - \frac{wL^4}{8}\right]$$

So y_{max^m} will be at $x = 0$

$$\boxed{y_{max^m} = -\frac{wL^4}{8EI}}$$

$$\boxed{\left(\frac{dy}{dx}\right)_{max^m} = \frac{wL^3}{6EI}}$$

Case 3: Simply Supported beam with uniformly distributed Loads:- In this case a simply supported beam is subjected to a uniformly distributed load whose rate of intensity varies as w / length.

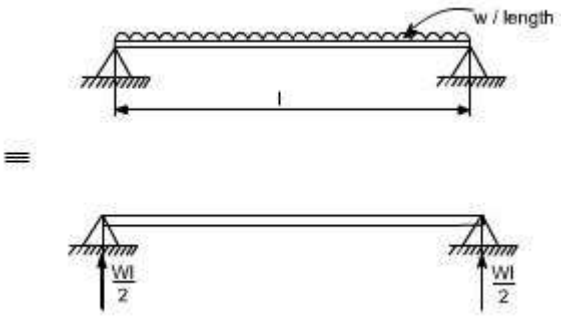

In order to write down the expression for bending moment consider any crosssection at distance of x metre from left end support.

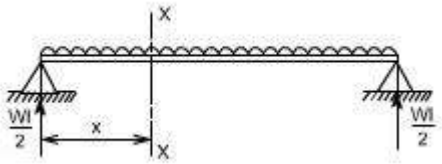

$$S.F|_{x-x} = w\left(\frac{l}{2}\right) - w.x$$

$$B.M|_{x-x} = w.\left(\frac{l}{2}\right).x - w.x.\left(\frac{x}{2}\right)$$

$$= \frac{wl.x}{2} - \frac{wx^2}{2}$$

The differential equation which gives the elastic curve for the deflected beam is

$$\frac{d^2y}{dx^2} = \frac{M}{EI} = \frac{1}{EI}\left[\frac{wl.x}{2} - \frac{wx^2}{2}\right]$$

$$\frac{dy}{dx} = \int \frac{wlx}{2EI}dx - \int \frac{wx^2}{2EI}dx + A$$

$$= \frac{wlx^2}{4EI} - \frac{wx^3}{6EI} + A$$

Integrating, once more one gets

$$y = \frac{wlx^3}{12EI} - \frac{wx^4}{24EI} + A.x + B \qquad \text{-----(1)}$$

Boundary conditions which are relevant in this case are that the deflection at each support must be zero.

i.e. at x = 0; y = 0 : at x = l; y = 0

let us apply these two boundary conditions on equation (1) because the boundary conditions are on y, This yields B = 0.

$$0 = \frac{wl^4}{12EI} - \frac{wl^4}{24EI} + A.I$$

$$A = -\frac{wl^3}{24EI}$$

So the equation which gives the deflection curve is

$$y = \frac{1}{EI}\left[\frac{wLx^3}{12} - \frac{wx^4}{24} - \frac{wL^3x}{24}\right]$$

Futher

In this case the maximum deflection will occur at the centre of the beam where x = L/2 [i.e. at the position where the load is being applied].So if we substitute the value of x = L/2

Then $$y_{max^m} = \frac{1}{EI}\left[\frac{wL}{12}\left(\frac{L^3}{8}\right) - \frac{w}{24}\left(\frac{L^4}{16}\right) - \frac{wL^3}{24}\left(\frac{L}{2}\right)\right]$$

$$\boxed{y_{max^m} = -\frac{5wL^4}{384EI}}$$

Conclusions

(i) The value of the slope at the position where the deflection is maximum would be zero.

(ii) Thevalue of maximum deflection would be at the centre i.e. at x = L/2.

The final equation which is governs the deflection of the loaded beam in this case is

$$y = \frac{1}{EI}\left[\frac{wLx^3}{12} - \frac{wx^4}{24} - \frac{wL^3x}{24}\right]$$

By successive differentiation one can find the relations for slope, bending moment, shear force and rate of loading.

Deflection (y)

$$yEI = \left[\frac{wLx^3}{12} - \frac{wx^4}{24} - \frac{wL^3x}{24}\right]$$

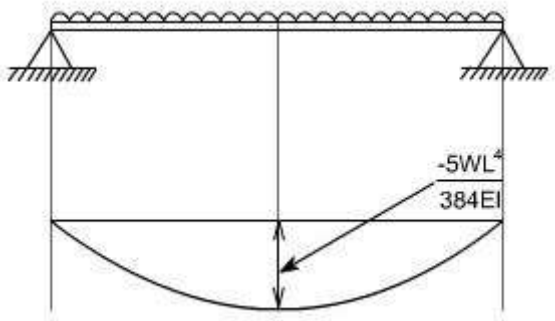

Slope (dy/dx)

$$EI.\frac{dy}{dx} = \left[\frac{3wLx^2}{12} - \frac{4wx^3}{24} - \frac{wL^3}{24}\right]$$

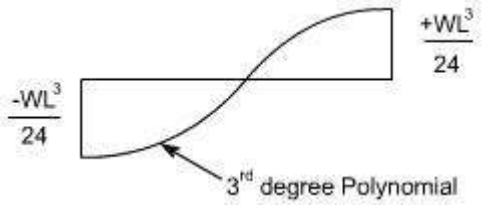

Bending Moment So the bending moment diagram would

$$\frac{d^2y}{dx^2} = \frac{1}{EI}\left[\frac{wLx}{2} - \frac{wx^2}{2}\right]$$ be

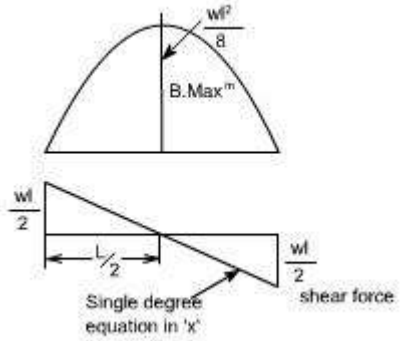

Shear Force

Shear force is obtained by taking third derivative.

$$EI\frac{d^3y}{dx^3} = \frac{wL}{2} - w.x$$

Rate of intensity of loading

$$EI\frac{d^4y}{dx^4} = -w$$

Case 4: The direct integration method may become more involved if the expression for entire beam is not valid for the entire beam.Let us consider a deflection of a simply supported beam which is subjected to a concentrated load W acting at a distance 'a' from the left end.

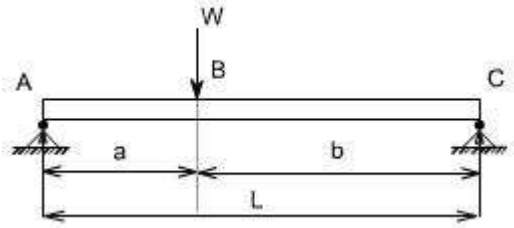

Let R_1 & R_2 be the reactions then,

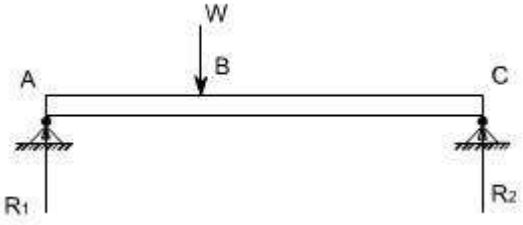

B.M for the portion AB

$M|_{AB} = R_1.x \quad 0 \le x \le a$

B.M for the portion BC

$M|_{BC} = R_1.x - W(x - a) \quad a \le x \le l$

so the differential equation for the two cases would be,

$$EI\frac{d^2y}{dx^2} = R_1 x$$

$$EI\frac{d^2y}{dx^2} = R_1 x - W(x - a)$$

These two equations can be integrated in the usual way to find 'y' but this will result in four constants of integration two for each equation. To evaluate the four constants of integration, four independent boundary conditions will be needed since the deflection of each support must be zero, hence the boundary conditions (a) and (b) can be realized.

Further, since the deflection curve is smooth, the deflection equations for the same slope and deflection at the point of application of load i.e. at x = a. Therefore four conditions required to evaluate these constants may be defined as follows:

(a) at x = 0; y = 0 in the portion AB i.e. $0 \le x \le a$

(b) at x = l; y = 0 in the portion BC i.e. $a \le x \le l$

(c) at x = a; dy/dx, the slope is same for both portion

(d) at x = a; y, the deflection is same for both portion

By symmetry, the reaction R_1 is obtained as

$$R_1 = \frac{Wb}{a+b}$$

Hence,

$$EI\frac{d^2y}{dx^2} = \frac{Wb}{(a+b)}x \qquad 0 \le x \le a \text{ --------(1)}$$

$$EI\frac{d^2y}{dx^2} = \frac{Wb}{(a+b)}x - W(x-a) \qquad a \le x \le l\text{---------(2)}$$

integrating (1) and (2) we get,

$$EI\frac{dy}{dx} = \frac{Wb}{2(a+b)}x^2 + k_1 \qquad 0 \le x \le a \text{ --------(3)}$$

$$EI\frac{dy}{dx} = \frac{Wb}{2(a+b)}x^2 - \frac{W(x-a)^2}{2} + k_2 \qquad a \le x \le l\text{--------(4)}$$

Using condition (c) in equation (3) and (4) shows that these constants should be equal, hence letting

$K_1 = K_2 = K$

Hence

$$EI\frac{dy}{dx} = \frac{Wb}{2(a+b)}x^2 + k \qquad 0 \le x \le a \text{------(3)}$$

$$EI\frac{dy}{dx} = \frac{Wb}{2(a+b)}x^2 - \frac{W(x-a)^2}{2} + k \qquad a \le x \le l \text{-------(4)}$$

Integrating agian equation (3) and (4) we get

$$Ely = \frac{Wb}{6(a+b)}x^3 + kx + k_3 \qquad 0 \le x \le a \text{------(5)}$$

$$Ely = \frac{Wb}{6(a+b)}x^3 - \frac{W(x-a)^3}{6} + kx + k_4 \qquad a \le x \le l \text{------(6)}$$

Utilizing condition (a) in equation (5) yields

$$k_3 = 0$$

Utilizing condition (b) in equation (6) yields

$$0 = \frac{Wb}{6(a+b)}l^3 - \frac{W(l-a)^3}{6} + kl + k_4$$

$$k_4 = -\frac{Wb}{6(a+b)}l^3 + \frac{W(l-a)^3}{6} - kl$$

But $a+b=l$,

Thus,

$$k_4 = -\frac{Wb(a+b)^2}{6} + \frac{Wb^3}{6} - k(a+b)$$

Now lastly k_3 is found out using condition (d) in equation (5) and equation (6), the condition (d) is that,

At x = a; y; the deflection is the same for both portion

Therefore $y|_{\text{from equation 5}} = y|_{\text{from equation 6}}$

or

$$\frac{Wb}{6(a+b)}x^3 + kx + k_3 = \frac{Wb}{6(a+b)}x^3 - \frac{W(x-a)^3}{6} + kx + k_4$$

$$\frac{Wb}{6(a+b)}a^3 + ka + k_3 = \frac{Wb}{6(a+b)}a^3 - \frac{W(a-a)^3}{6} + ka + k_4$$

Thus, $k_4 = 0$;

OR

$$k_4 = -\frac{Wb(a+b)^2}{6} + \frac{Wb^3}{6} - k(a+b) = o$$

$$k(a+b) = -\frac{Wb(a+b)^2}{6} + \frac{Wb^3}{6}$$

$$k = -\frac{Wb(a+b)}{6} + \frac{Wb^3}{6(a+b)}$$

so the deflection equations for each portion of the beam are

$$Ely = \frac{Wb}{6(a+b)}x^3 + kx + k_3$$

$$Ely = \frac{Wbx^3}{6(a+b)} - \frac{Wb(a+b)x}{6} + \frac{Wb^3x}{6(a+b)} \qquad \text{----for } \mathbf{0 \le x \le a} \text{ ----- (7)}$$

and for other portion

$$Ely = \frac{Wb}{6(a+b)}x^3 - \frac{W(x-a)^3}{6} + kx + k_4$$

Substituting the value of 'k' in the above equation

$$Ely = \frac{Wbx^3}{6(a+b)} - \frac{W(x-a)^3}{6} - \frac{Wb(a+b)x}{6} + \frac{Wb^3x}{6(a+b)} \quad \text{For } \mathbf{a \le x \le l} \text{ ----- (8)}$$

so either of the equation (7) or (8) may be used to find the deflection at x = a

hence substituting x = a in either of the equation we get

$$Y|_{x=a} = -\frac{Wa^2b^2}{3El(a+b)}$$

OR if a = b = l/2

$$\boxed{Y_{max^m} = -\frac{WL^3}{48El}}$$

ALTERNATE METHOD: There is also an alternative way to attempt this problem in a more simpler way. Let us considering the origin at the point of application of the load,

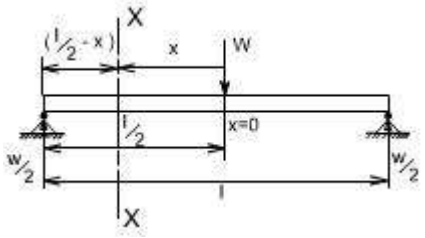

$$S.F|_{xx} = \frac{W}{2}$$

$$B.M|_{xx} = \frac{W}{2}\left(\frac{l}{2} - x\right)$$

substituting the value of M in the governing equation for the deflection

$$\frac{d^2y}{dx^2} = \frac{\frac{W}{2}\left(\frac{l}{2} - x\right)}{EI}$$

$$\frac{dy}{dx} = \frac{1}{EI}\left[\frac{WLx}{4} - \frac{Wx^2}{4}\right] + A$$

$$y = \frac{1}{EI}\left[\frac{WLx^2}{8} - \frac{Wx^2}{12}\right] + Ax + B$$

Boundary conditions relevant for this case are as follows

(i) at x = 0; dy/dx= 0 hence, A = 0

(ii) at x = l/2; y = 0 (because now l / 2 is on the left end or right end support since we have taken the origin at the centre)

Thus,

$$0 = \left[\frac{WL^3}{32} - \frac{WL^3}{96} + B\right]$$

$$B = -\frac{WL^3}{48}$$

Hence he equation which governs the deflection would be

$$y = \frac{1}{EI}\left[\frac{WLx^2}{8} - \frac{Wx^3}{12} - \frac{WL^3}{48}\right]$$

Hence

$$Y_{max^m}\big|_{at\,x=0} = -\frac{WL^3}{48EI} \quad \text{At the centre}$$

$$\left(\frac{dy}{dx}\right)_{max^m}\Big|_{at\,x=\pm\frac{L}{2}} = \pm\frac{WL^2}{16EI} \quad \text{At the ends}$$

Hence the integration method may be bit cumbersome in some of the case. Another limitation of the method would be that if the beam is of non uniform cross section,

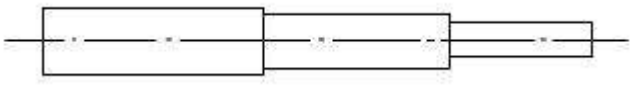

i.e. it is having different cross-section then this method also fails.

So there are other methods by which we find the deflection like

1. Macaulay's method in which we can write the different equation for bending moment for different sections.

2. Area moment methods

MOMENT-AREA METHODS:

The area moment method is a semi graphical method of dealing with problems of deflection of beams subjected to bending. The method is based on a geometrical interpretation of definite integrals. This is applied to cases where the equation for bending moment to be written is cumbersome and the loading is relatively simple. Let us recall the figure, which we referred while deriving the differential equation governing the beams.

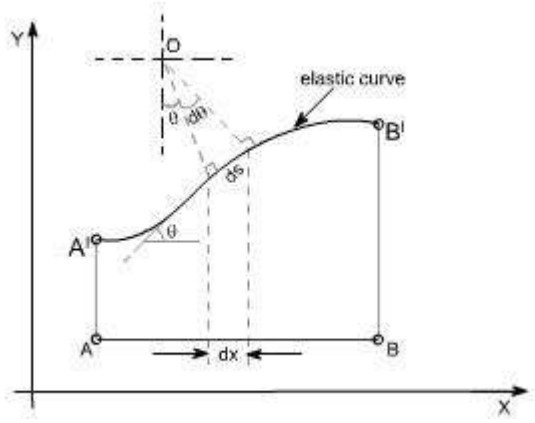

It may be noted that d is an angle subtended by an arc element ds and M is the bending moment to which this element is subjected. We can assume,

ds = dx [since the curvature is small] hence,

R d = ds

$$\frac{d\theta}{ds} = \frac{1}{R} = \frac{M}{EI}$$

$$\frac{d\theta}{ds} = \frac{M}{EI}$$

But for small curvature[but θ is the angle ,slope is $\tan\theta = \frac{dy}{dx}$ for small angles $\tan\theta \approx \theta$,hence $\theta \cong \frac{dy}{dx}$ so we get $\frac{d^2y}{dx^2} = \frac{M}{EI}$ by putting ds ≈ dx]

Hence,

$$\frac{d\theta}{dx} = \frac{M}{EI} \text{ or } \boxed{d\theta = \frac{M.dx}{EI}} \quad \text{- - - - - (1)}$$

The relationship as described in equation (1) can be given a very simple graphical interpretation with reference to the elastic plane of the beam and its bending moment diagram

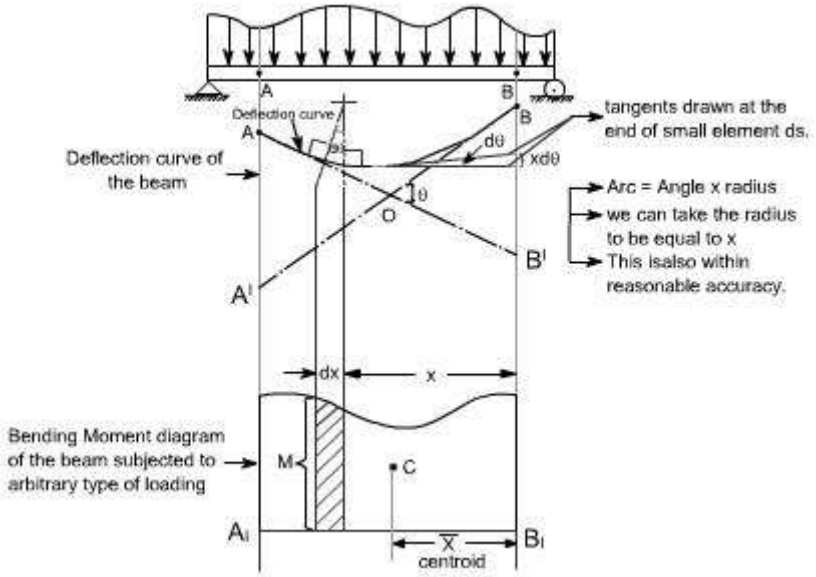

Refer to the figure shown above consider AB to be any portion of the elastic line of the loaded beam and $A_1B_1$is its corresponding bending moment diagram.

Let AO = Tangent drawn at A

BO = Tangent drawn at B

Tangents at A and B intersects at the point O.

Futher, AA ' is the deflection of A away from the tangent at B while the vertical distance B'B is the deflection of point B away from the tangent at A. All these quantities are futher understood to be very small.

Let ds ≈ dx be any element of the elastic line at a distance x from B and an angle between at its tangents be d . Then, as derived earlier

$$d\theta = \frac{M.dx}{EI}$$

This relationship may be interpreted as that this angle is nothing but the area M.dx of the shaded bending moment diagram divided by EI.

From the above relationship the total angle between the tangents A and B may be determined as

$$\theta = \int_A^B \frac{Mdx}{EI} = \frac{1}{EI}\int_A^B Mdx$$

Since this integral represents the total area of the bending moment diagram, hence we may conclude this result in the following theorem **Theorem I:**

$$\left\{\begin{matrix}\text{slope or } \theta \\ \text{between any two points}\end{matrix}\right\} = \left\{\begin{matrix}\frac{1}{EI} \times \text{area of B.M diagram between} \\ \text{corresponding portion of B.M diagram}\end{matrix}\right\}$$

Now let us consider the deflection of point B relative to tangent at A, this is nothing but the vertical distance BB'. It may be note from the bending diagram that bending of the element ds contributes to this deflection by an amount equal to x d [each of this intercept may be considered as the arc of a circle of radius x subtended by the angle]

Hence the total distance B'B becomes $\delta = \int_A^B x d\theta$

The limits from A to B have been taken because A and B are the two points on the elastic curve, under consideration]. Let us substitute the value of d = M dx / EI as derived earlier

$\delta = \int_A^B x \frac{Mdx}{EI} = \int_A^B \frac{Mdx}{EI}.x$ [This is infact the moment of area of the bending moment diagram]

Since M dx is the area of the shaded strip of the bending moment diagram and x is its distance from B, we therefore conclude that right hand side of the above equation represents first moment area with respect to B of the total bending moment area between A and B divided by EI.

Therefore,we are in a position to state the above conclusion in the form of theorem as follows:

Theorem II:

Deflection of point 'B' relative to point A $= \frac{1}{EI} \times \left\{\begin{matrix}\text{first moment of area with respect} \\ \text{to point B, of the total B.M diagram}\end{matrix}\right\}$

Futher, the first moment of area, according to the definition of centroid may be written as $A\bar{x}$, where $\bar{x}$ is equal to distance of centroid and a is the total area of bending moment

Thus, $\boxed{\delta_A = \frac{1}{EI} A\bar{x}}$

Therefore,the first moment of area may be obtained simply as a product of the total area of the B.M diagram betweenthe points A and B multiplied by the distance $\bar{x}$ to its centroid C.

If there exists an inflection point or point of contreflexure for the elastic line of the loaded beam between the points A and B, as shown below,

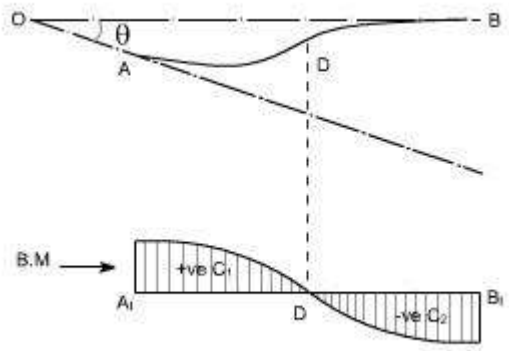

Then, adequate precaution must be exercised in using the above theorem. In such a case B. M diagram gets divide into two portions +ve and –ve portions with centroids $C_1$and C_2. Then to find an angle between the tangentsat the points A and B

$$\theta = \int_A^D \frac{Mdx}{EI} - \int_D^B \frac{Mdx}{EI}$$

And similarly for the deflection of B away from the tangent at A becomes

$$\delta = \int_A^D \frac{M.dx}{EI}.x - \int_B^D \frac{M.dx}{EI}.x$$

Illustrative Examples: Let us study few illustrative examples, pertaining to the use of these theorems **Example 1:**

1. A cantilever is subjected to a concentrated load at the free end.It is required to find out the deflection at the free end.

Fpr a cantilever beam, the bending moment diagram may be drawn as shown below

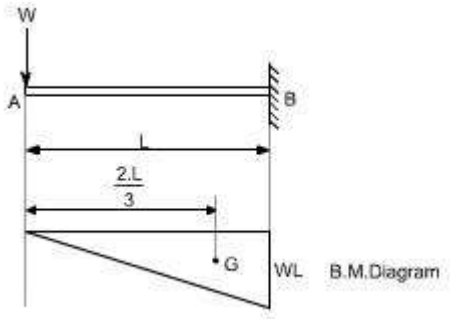

Let us workout this problem from the zero slope condition and apply the first area - moment theorem

$$\text{slope at A} = \frac{1}{EI}[\text{Area of B.M diagram between the points A and B}]$$

$$= \frac{1}{EI}\left[\frac{1}{2}L.WL\right]$$

$$= \frac{WL^2}{2EI}$$

The deflection at A (relative to B) may be obtained by applying the second area - moment theorem

NOTE: In this case the point B is at zero slope.

Thus,

$$\delta = \frac{1}{EI}[\text{first moment of area of B.M diagram between A and B about A}]$$

$$= \frac{1}{EI}[A\bar{y}]$$

$$= \frac{1}{EI}\left[\left(\frac{1}{2}L.WL\right)\frac{2}{3}L\right]$$

$$= \frac{WL^3}{3EI}$$

Example 2: Simply supported beam is subjected to a concentrated load at the mid span determine the value of deflection.

A simply supported beam is subjected to a concentrated load W at point C. The bending moment diagram is drawn below the loaded beam.

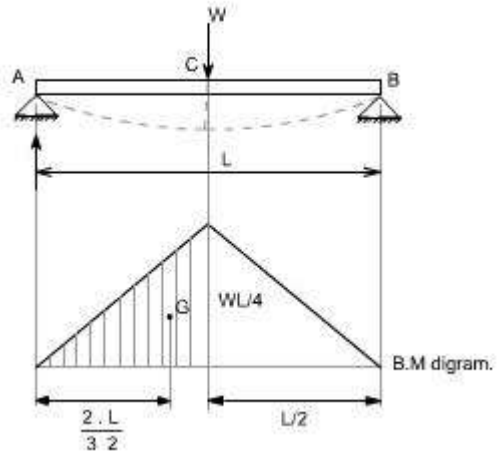

Again working relative to the zero slope at the centre C.

$$\text{slope at A} = \frac{1}{EI}[\text{Area of B.M diagram between A and C}]$$

$$= \frac{1}{EI}\left[\left(\frac{1}{2}\right)\left(\frac{L}{2}\right)\left(\frac{WL}{4}\right)\right]$$ we are taking half area of the B.M because we have to work out this relative to a zero slope

$$= \frac{WL^2}{16EI}$$

Deflection of A relative to C = central deflection of C

or

$$\delta_C = \frac{1}{EI}[\text{Moment of B.M diagram between points A and C about A}]$$

$$= \frac{1}{EI}\left[\left(\frac{1}{2}\right)\left(\frac{L}{2}\right)\left(\frac{WL}{4}\right)\frac{2}{3}L\right]$$

$$= \frac{WL^3}{48EI}$$

Example 3: A simply supported beam is subjected to a uniformly distributed load, with a intensity of loading W / length. It is required to determine the deflection.

The bending moment diagram is drawn, below the loaded beam, the value of maximum B.M is equal to $WI^2 / 8$

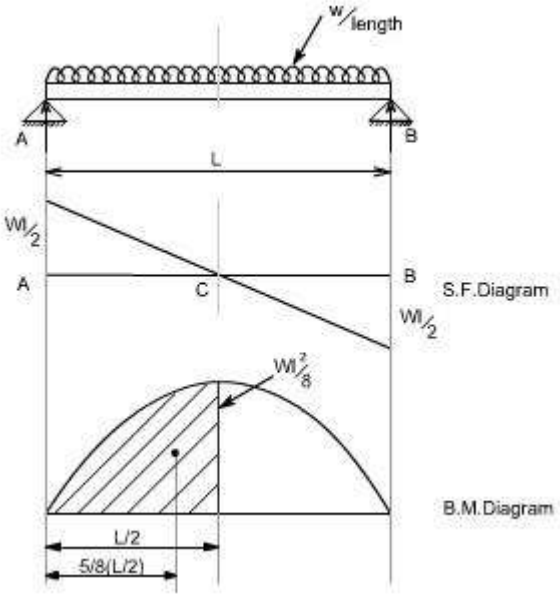

So by area moment method,

Slope at point C w.r.t point A $= \frac{1}{EI}$[Area of B.M diagram between point A and C]

$$= \frac{1}{EI}\left[\left(\frac{2}{3}\right)\left(\frac{WL^2}{8}\right)\left(\frac{L}{2}\right)\right]$$

$$= \frac{WL^3}{24EI}$$

Deflection at point C relative to A $= \frac{1}{EI}[A\,\bar{y}]$

$$= \frac{1}{EI}\left[\left(\frac{WL^3}{24}\right)\left(\frac{5}{8}\right)\left(\frac{L}{2}\right)\right]$$

$$= \frac{5}{384EI}.WL^4$$

Macaulay's Methods

If the loading conditions change along the span of beam, there is corresponding change in moment equation. This requires that a separate moment equation be written between each change of load point and that two integration be made for each such moment equation. Evaluation of the constants introduced by each integration can become very involved. Fortunately, these complications can be avoided by writing single moment equation in such a way that it becomes continuous for entire length of the beam in spite of the discontinuity of loading.

Note : In Macaulay's method some author's take the help of unit function approximation (i.e. Laplace transform) in order to illustrate this method, however both are essentially the same.

For example consider the beam shown in fig below:

Let us write the general moment equation using the definition $M = (\sum M)_L$, Which means that we consider the effects of loads lying on the left of an exploratory section. The moment equations for the portions AB,BC and CD are written as follows

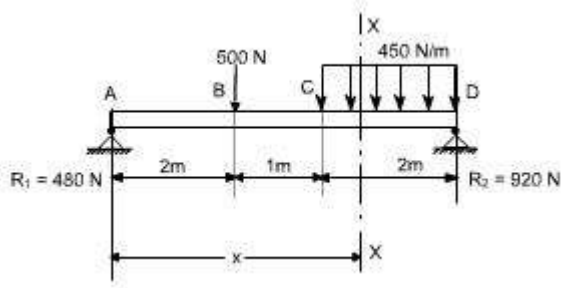

$$M_{AB} = 480\,x\ \text{N.m}$$

$$M_{BC} = \left[480\,x - 500(x-2)\right]\text{N.m}$$

$$M_{CD} = \left[480\,x - 500(x-2) - \frac{450}{2}(x-3)^2\right]\text{N.m}$$

It may be observed that the equation for M_{CD} will also be valid for both M_{AB} and M_{BC} provided that the terms (x - 2) and (x - 3)^{2}are neglected for values of x less than 2 m and 3 m, respectively. In other words, the terms (x - 2) and (x - 3)^2 are nonexistent for values of x for which the terms in parentheses are negative.

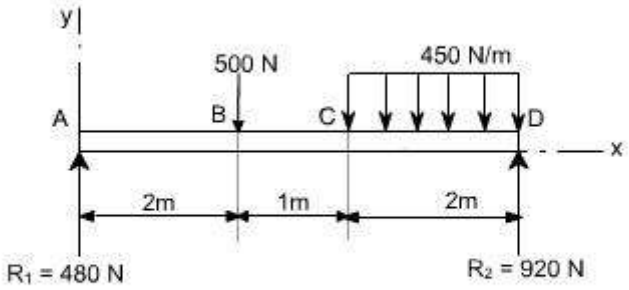

As an clear indication of these restrictions,one may use a nomenclature in which the usual form of parentheses is replaced by pointed brackets, namely, ‹ ›. With this change in nomenclature, we obtain a single moment equation

$$M = \left\langle 480x - 500\langle x-2\rangle - \frac{450}{2}\langle x-3\rangle^2 \right\rangle \text{N.m}$$

Which is valid for the entire beam if we postulate that the terms between the pointed brackets do not exists for negative values; otherwise the term is to be treated like any ordinary expression.

As an another example, consider the beam as shown in the fig below. Here the distributed load extends only over the segment BC. We can create continuity, however, by assuming that the distributed load extends beyond C and adding an equal upward-distributed load to cancel its effect beyond C, as shown in the adjacent fig below. The general moment equation, written for the last segment DE in the new nomenclature may be written as:

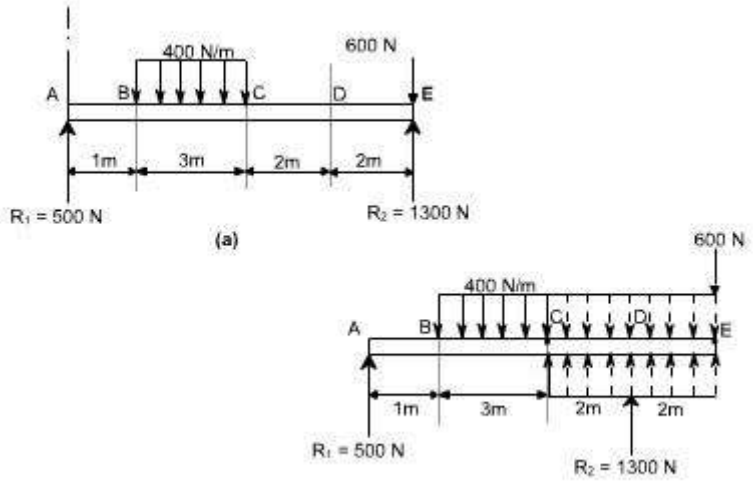

$$M = \left(500x - \frac{400}{2}(x-1)^2 + \frac{400}{2}(x-4)^2 + 1300(x-6)\right) N.m$$

It may be noted that in this equation effect of load 600 N won't appear since it is just at the last end of the beam so if we assume the exploratary just at section at just the point of application of 600 N than x = 0 or else we will here take the X - section beyond 600 N which is invalid.

Procedure to solve the problems

(i). After writing down the moment equation which is valid for all values of 'x' i.e. containing pointed brackets, integrate the moment equation like an ordinary equation.

(ii). While applying the B.C's keep in mind the necessary changes to be made regarding the pointed brackets. **Ilustrative Examples :**

1. A concentrated load of 300 N is applied to the simply supported beam as shown in Fig.Determine the equations of the elastic curve between each change of load point and the maximum deflection in the beam.

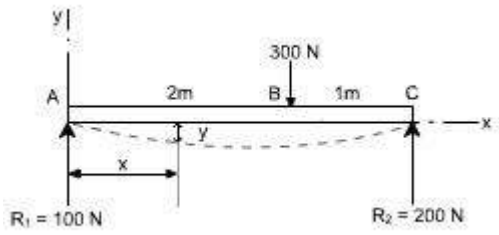

Solution : writing the general moment equation for the last portion BC of the loaded beam,

$$EI\frac{d^2y}{dx^2} = M = \left(100x - 300\langle x-2\rangle\right)N.m \qquad .....(1)$$

Integrating twice the above equation to obtain slope and the deflection

$$EI\frac{dy}{dx} = \left(50x^2 - 150\langle x-2\rangle^2 + C_1\right)N.m^2 \qquad .....(2)$$

$$Ely = \left(\frac{50}{3}x^3 - 50\langle x-2\rangle^3 + C_1x + C_2\right)N.m^3 \qquad .....(3)$$

To evaluate the two constants of integration. Let us apply the following boundary conditions:

1. At point A where x = 0, the value of deflection y = 0. Substituting these values in Eq. (3) we find C_2 = 0.keep in mind that$< x -2 >^3$ is to be neglected for negative values.

2. At the other support where x = 3m, the value of deflection y is also zero. substituting these values in the deflection Eq. (3), we obtain

$$0 = \left(\frac{50}{3}3^3 - 50(3-2)^3 + 3.C_1\right) \text{ or } C_1 = -133N.m^2$$

Having determined the constants of integration, let us make use of Eqs. (2) and (3) to rewrite the slope and deflection equations in the conventional form for the two portions.

segment AB $(0 \le x \le 2m)$

$$EI\frac{dy}{dx} = \left(50x^2 - 133\right)N.m^2 \qquad .....(4)$$

$$Ely = \left(\frac{50}{3}x^3 - 133x\right)N.m^3 \qquad .....(5)$$

segment BC $(2m \le x \le 3m)$

$$EI\frac{dy}{dx} = \left(50x^2 - 150\langle x-2\rangle^2 - 133x\right)N.m^2 .....(6)$$

$$Ely = \left(\frac{50}{3}x^3 - 50\langle x-2\rangle^3 - 133x\right)N.m^3 .....(7)$$

Continuing the solution, we assume that the maximum deflection will occur in the segment AB. Its location may be found by differentiating Eq. (5) with respect to x and setting the derivative to be equal to zero, or, what amounts to the same thing, setting the slope equation (4) equal to zero and solving for the point of zero slope.

We obtain

$50x^2 – 133 = 0$ or x = 1.63 m (It may be kept in mind that if the solution of the equation does not yield a value < 2 m then we have to try the other equations which are valid for segment BC)

Since this value of x is valid for segment AB, our assumption that the maximum deflection occurs in this region is correct. Hence, to determine the maximum deflection, we substitute x = 1.63 m in Eq (5), which yields

$$EIy\big|_{max\,m} = -145\,N.m^3 \qquad .....(8)$$

The negative value obtained indicates that the deflection y is downward from the x axis.quite usually only the magnitude of the deflection, without regard to sign, is desired; this is denoted by , the use of y may be reserved to indicate a directed value of deflection. if E = 30 Gpa and I = 1.9 x 10^6 mm^4 = 1.9 x 10^{-6} m^4 , Eq. (h) becomes

$$y\big|_{max\,m} = (30\times10^{9})(1.9\times10^{-6})$$

Then $= -2.54\,mm$

Example 2:

It is required to determine the value of EIy at the position midway between the supports and at the overhanging end for the beam shown in figure below.

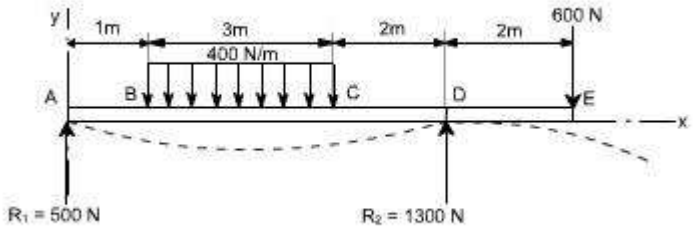

Solution:

Writing down the moment equation which is valid for the entire span of the beam and applying the differential equation of the elastic curve, and integrating it twice, we obtain

$$EI\frac{d^2y}{dx^2} = M = \left(500x - \frac{400}{2}(x-1)^2 + \frac{400}{2}(x-4)^2 + 1300(x-6)\right)N.m$$

$$EI\frac{dy}{dx} = \left(250x^2 - \frac{200}{3}(x-1)^3 + \frac{200}{3}(x-4)^3 + 650(x-6)^2 + C_1\right)N.m$$

$$EIy = \left(\frac{250}{3}x^3 - \frac{50}{3}(x-1)^4 + \frac{50}{3}(x-4)^4 + \frac{650}{3}(x-6)^3 + C_1x + C_2\right)N.m^3$$

To determine the value of C_2, It may be noted that EIy = 0 at x = 0,which gives C_2 = 0.Note that the negative terms in the pointed brackets are to be ignored Next,let us use the condition that EIy = 0 at the right support where x = 6m.This gives

$$0 = \frac{250}{3}(6)^3 - \frac{50}{3}(5)^4 + \frac{50}{3}(2)^4 + 6C_1 \text{ or } C_1 = -1308 \text{N.m}^2$$

Finally, to obtain the midspan deflection, let us substitute the value of x = 3m in the deflection equation for the segment BC obtained by ignoring negative values of the bracketed terms $x - 4^4$ and $x - 6^3$. We obtain

$$EIy = \frac{250}{3}(3)^3 - \frac{50}{3}(2)^4 - 1308(3) = -1941 \text{ N.m}^3$$

For the overhanging end where x=8 m,we have

$$EIy = \left(\frac{250}{3}(8)^3 - \frac{50}{3}(7)^4 + \frac{50}{3}(4)^4 + \frac{650}{3}(2)^3 - 1308(8)\right)$$

$$= -1814 \text{N.m}^3$$

Example 3:

A simply supported beam carries the triangularly distributed load as shown in figure. Determine the deflection equation and the value of the maximum deflection.

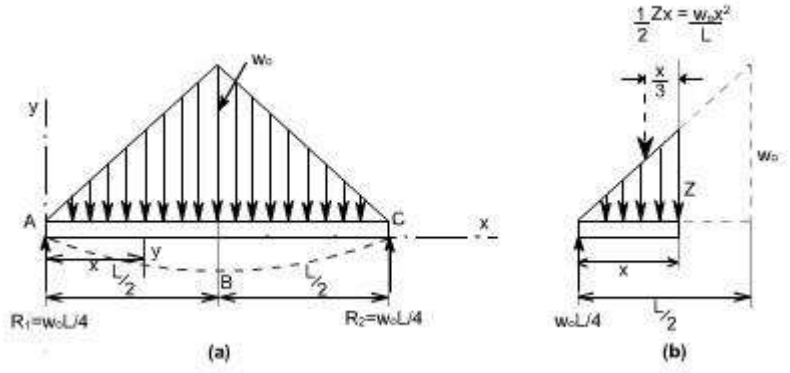

Solution:

Due to symmetry, the reactionsis one half the total load of $1/2w_0L$, or $R_1 = R_2 = 1/4w_0L$.Due to the advantage of symmetry to the deflection curve from A to B is the mirror image of that from C to B. The condition of zero deflection at A and of zero slope at B do not require the use of a general moment equation. Only the moment equation for segment AB is needed, and this may be easily written with the aid of figure(b).

Taking into account the differential equation of the elastic curve for the segment AB and integrating twice, one can obtain

$$EI\frac{d^2y}{dx^2} = M_{AB} = \frac{w_0L}{4}x - \frac{w_0x^2}{L}\cdot\frac{x}{3} \qquad \text{.....(1)}$$

$$EI\frac{dy}{dx} = \frac{w_0Lx^2}{8} - \frac{w_0x^4}{12L} + C_1 \qquad \text{.....(2)}$$

$$EIy = \frac{w_0Lx^3}{24} - \frac{w_0x^5}{60L} + C_1x + C_2 \text{.....(3)}$$

In order to evaluate the constants of integration,let us apply the B.C'swe note that at the support A, y = 0 at x = 0.Hence from equation (3), we get $C_2 = 0$. Also,because of symmetry, the slope dy/dx = 0 at midspan where x = L/2.Substituting these conditions in equation (2) we get

$$0 = \frac{w_0 L}{8}\left(\frac{L}{2}\right)^2 - \frac{w_0}{12L}\left(\frac{L}{2}\right)^4 + C_1 C_1 = -\frac{5w_0 L^3}{192}$$

Hence the deflection equation from A to B (and also from C to B because of symmetry) becomes

$$EIy = \frac{w_0 L x^3}{24} - \frac{w_0 x^5}{60L} - \frac{5w_0 L^3 x}{192}$$

Whichreducesto

$$EIy = -\frac{w_0 x}{960L}\left(25L^4 - 40L^2 x^2 + 16x^4\right)$$

The maximum deflection at midspan,where x = L/2 is then found to be

$$\boxed{EIy = -\frac{w_0 L^4}{120}}$$

Example 4: couple acting

Consider a simply supported beam which is subjected to a couple M at adistance 'a' from the left end. It is required to determine using the Macauley's method.

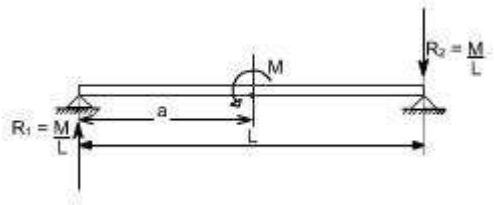

To deal with couples, only thing to remember is that within the pointed brackets we have to take some quantity and this should be raised to the power zero.i.e. $M\langle x - a\rangle^0$. We have taken the power 0 (zero) ' because ultimately the term $M\langle x - a\rangle^0$Should have the moment units.Thus with integration the quantity x - a becomes either $\langle x - a\rangle^1$or $\langle x - a\rangle^2$

Or

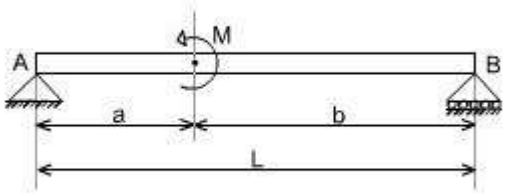

Therefore, writing the general moment equation we get

$$M = R_1 x - M\langle x - a\rangle \text{ or } EI\frac{d^2y}{dx^2} = M$$

Integrating twice we get

$$EI\frac{dy}{dx} = R_1.\frac{x^2}{2} - M\langle x - a\rangle^1 + C_1$$

$$EI.y = R_1.\frac{x^3}{6} - \frac{M}{2}\langle x - a\rangle^2 + C_1 x + C_2$$

Example 5:

A simply supported beam is subjected to U.d.l in combination with couple M. It is required to determine the deflection.

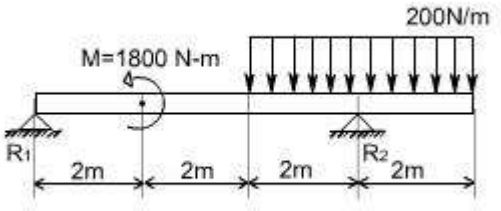

This problem may be attemped in the some way. The general moment equation my be written as

$$M(x) = R_1 x - 1800\langle x - 2\rangle^0 - \frac{200\langle x - 4\rangle\langle x - 4\rangle}{2} + R_2\langle x - 6\rangle$$

$$= R_1 x - 1800\langle x - 2\rangle^0 - \frac{200\langle x - 4\rangle^2}{2} + R_2\langle x - 6\rangle$$

Thus,

$$EI\frac{d^2y}{dx^2} = R_1 x - 1800\langle x - 2\rangle^0 - \frac{200\langle x - 4\rangle^2}{2} + R_2\langle x - 6\rangle$$

Integrate twice to get the deflection of the loaded beam.

Module 4

Lecture 1- 4: Closed Coiled helical Spring

Closed Coiled helical springs subjected to axial loads:

Definition: A spring may be defined as an elastic member whose primary function is to deflect or distort under the action of applied load; it recovers its original shape when load is released. or

Springs are energy absorbing units whose function is to store energy and to restore it slowly or rapidly depending on the particular application.

Important types of springs are:

There are various types of springs such as

(i) helical spring: They are made of wire coiled into a helical form, the load being applied along the axis of the helix. In these type of springs the major stresses is torsional shear stress due to twisting. They are both used in tension and compression.

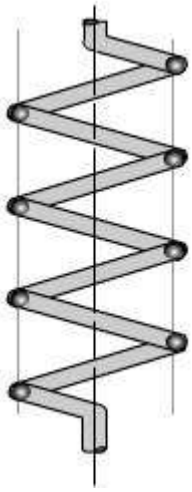

(ii) Spiral springs: They are made of flat strip of metal wound in the form of spiral and loaded in torsion.

In this the major stresses are tensile and compression due to bending.

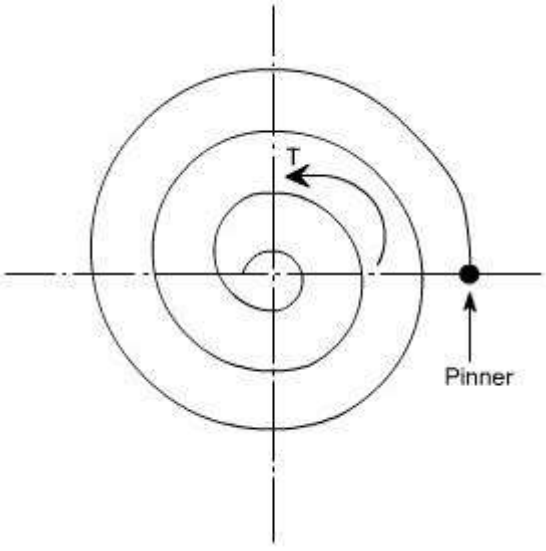

(iv) Leaf springs: They are composed of flat bars of varying lengths clamped together so as to obtain greater efficiency . Leaf springs may be full elliptic, semi elliptic or

cantilever types, In these type of springs the major stresses which come into picture are tensile & compressive.

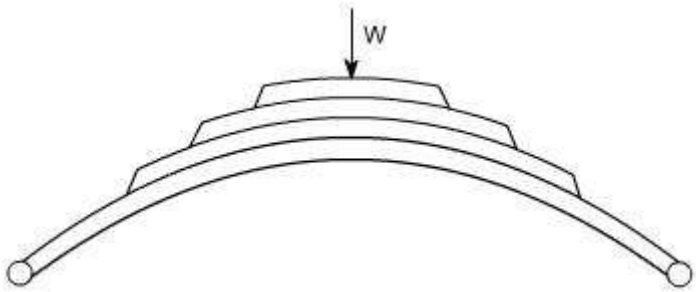

These type of springs are used in the automobile suspension system.

Uses of springs :

(a) To apply forces and to control motions as in brakes and clutches.

(b) To measure forces as in spring balance.

(c) To store energy as in clock springs.

(d) To reduce the effect of shock or impact loading as in carriage springs.

(e) To change the vibrating characteristics of a member as inflexible mounting of motors.

Derivation of the Formula :

In order to derive a necessary formula which governs the behaviour of springs, consider a closed coiled spring subjected to an axial load W.

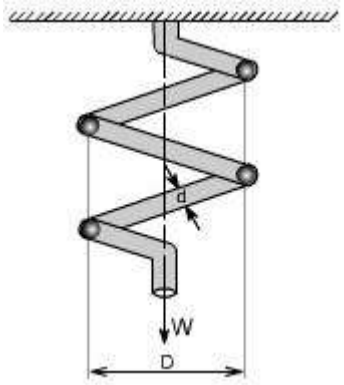

Let

W = axial load D = mean

coil diameter d = diameter

of spring wire n = number

of active coils

C = spring index = D / d For circular wires

l = length of spring wire G = modulus of

rigidity x = deflection of spring q = Angle
of twist

when the spring is being subjected to an axial load to the wire of the spring gets be twisted like a shaft.

If q is the total angle of twist along the wire and x is the deflection of spring under the action of load W along the axis of the coil, so that x = D / 2 . again l = D n [consider ,one half turn of a close coiled helical spring]

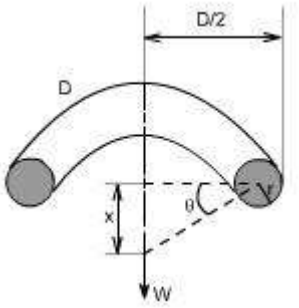

Assumptions: (1) The Bending & shear effects may be neglected

(2) For the purpose of derivation of formula, the helix angle is considered to be so small that it may be neglected.

Any one coil of a such a spring will be assumed to lie in a plane which is nearly ⊥ to the axis of the spring. This requires that adjoining coils be close together. With this limitation, a section taken perpendicular to the axis the spring rod becomes nearly vertical. Hence to maintain equilibrium of a segment of the spring, only a shearing force V = F and Torque T = F. r are required at any X – section. In the analysis of springs it is customary to assume that the shearing stresses caused by the direct shear force is uniformly distributed and is negligible so applying the torsion formula. Using the torsion formula i.e

$$\frac{T}{J} = \frac{\tau}{r} = \frac{G.\theta}{l}$$

and substituting $J = \frac{\pi d^4}{32}; T = w.\frac{d}{2}$

$$\theta = \frac{2.x}{D}; l = \pi D.x$$

SPRING DEFLECTION

$$\frac{w.d/2}{\frac{\pi d^4}{32}} = \frac{G.2x/D}{\pi.D.n}$$

Thus,

$$x = \frac{8w.D^3.n}{G.d^4}$$

Spring striffness: The stiffness is defined as the load per unit deflection therefore

$$k = \frac{w}{x} = \frac{w}{\frac{8w.D^3.n}{G.d^4}}$$

Therefore

$$k = \frac{G.d^4}{8.D^3.n}$$

Shear stress

$$\frac{w.d/2}{\frac{\pi d^4}{32}} = \frac{\tau_{max^m}}{d/2}$$

$$\text{or } \tau_{max^m} = \frac{8wD}{\pi d^3}$$

WAHL'S FACTOR :

In order to take into account the effect of direct shear and change in coil curvature a stress factor is defined, which is known as Wahl's factor

K = Wahl' s factor and is defined as $K = \frac{4c-1}{4c-4} + \frac{0.615}{c}$

Where C = spring index

= D/d

if we take into account the Wahl's factor than the formula for the shear stress becomes $\tau_{max^m} = \frac{16.T.k}{\pi d^3}$

Strain Energy : The strain energy is defined as the energy which is stored within a material when the work has been done on the material.

In the case of a spring the strain energy would be due to bending and the strain energy due to bending is given by the expansion

$$U = \frac{T^2 L}{2EI}$$

$$L = \pi D n$$

$$I = \frac{\pi d^4}{64}$$

so after substitution we get

$$U = \frac{32 T^2 D n}{E.d^4}$$

Example: A close coiled helical spring is to carry a load of 5000N with a deflection of 50 mm and a maximum shearing stress of 400 N/mm^2 .if the number of active turns or active coils is 8.Estimate the following:

(i) wire diameter

(ii) mean coil diameter

(iii) weight of the spring.

Assume G = 83,000 N/mm^2 ; = 7700 kg/m^3 **solution :**

(i) for wire diametre if W is the axial load, then

$$\frac{w.d/2}{\frac{\pi d^4}{32}} = \frac{\tau_{max^m}}{d/2}$$

$$D = \frac{400}{d/2} \cdot \frac{\pi d^4}{32} \cdot \frac{2}{W}$$

$$D = \frac{400.\pi d^3.2}{5000.16}$$

$$D = 0.0314\, d^3$$

Futher, deflection is given as

$$x = \frac{8wD^3.n}{G.d^4}$$

on substituting the relevant parameters we get

$$50 = \frac{8.5000.(0.0314\, d^3)^3.8}{83{,}000.d^4}$$

$$d = 13.32 mm$$

Therefore,

D = .0314 x (13.317)^{3}mm

=74.15mm

D = 74.15 mm

<u>Weight</u>

mass or weight = volume. density

= area. length of the spring. density of spring material

$= \frac{\pi d^2}{4} . \pi D n . \rho$

On substituting the relevant parameters we get

Weight = 1.996 kg

= 2.0kg

Close – coiled helical spring subjected to axial torque T or axial couple.

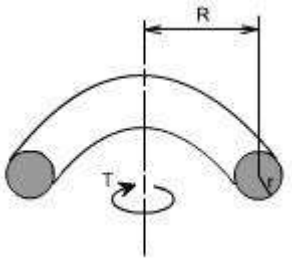

In this case the material of the spring is subjected to pure bending which tends to reduce Radius R of the coils. In this case the bending moment is constant through out the spring and is equal to the applied axial Torque T. The stresses i.e. maximum bending stress may thus be determined from the bending theory.

$$\sigma_{max} = \frac{M.y}{I}$$

$$= \frac{T.d/2}{\frac{\pi d^4}{64}}$$

$$\sigma_{max} = \frac{32T}{\pi d^3}$$

Deflection or wind – up angle:

Under the action of an axial torque the deflection of the spring becomes the “wind – up” angle of the spring which is the angle through which one end turns relative to the other. This will be equal to the total change of slope along the wire, according to area – moment theorem

$$\theta = \int_0^L \frac{M dL}{EI} \text{ but } M = T$$

$$= \int_0^L \frac{T.dL}{EI} = \frac{T}{EI}\int_0^L dL$$

Thus, as 'T' remains constant

$$\theta = \frac{T.L}{EI}$$

Futher

$L = \pi D.n$

$$I = \frac{\pi d^4}{64}$$

Therefore, on substitution, the value of θ obtained is

$$\boxed{\theta = \frac{64T.D.n}{E.d^4}}$$

Springs in Series: If two springs of different stiffness are joined endon and carry a common load W, they are said to be connected in series and the combined stiffness and deflection are given by the following equation.

$$\frac{W}{k} = x_1 + x_2 = \frac{W}{k_1} + \frac{W}{k_2}$$

or

$$\boxed{\frac{1}{k} = \frac{1}{k_1} + \frac{1}{k_2}}$$



Springs in parallel: If the two spring are joined in such a way that they have a common deflection 'x' ; then they are said to be connected in parallel.In this care the load carried is shared between the two springs and total load $W = W_1 + W_2$

$$x = \frac{W}{k} = \frac{W_1}{k_1} = \frac{W_2}{k_2}$$

Thus $W_1 = \frac{Wk_1}{k}$

$$W_2 = \frac{Wk_2}{k}$$

Futher

$$W = W_1 + W_2$$

thus $\boxed{k = k_1 + k_2}$

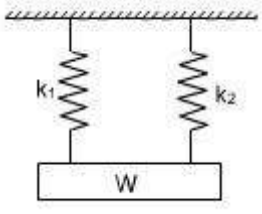

Module 4:

Lecture 5-8: Buckling of Columns Introduction:

Structural members which carry compressive loads may be divided into two broad categories depending on their relative lengths and cross-sectional dimensions.

Columns:

Short, thick members are generally termed columns and these usually fail by crushing when the yield stress of the material in compression is exceeded.

Struts:

Long, slender columns are generally termed as struts, they fail by buckling some time before the yield stress in compression is reached. The buckling occurs owing to one the following reasons.

(a). the strut may not be perfectly straight initially.

(b). the load may not be applied exactly along the axis of the Strut.

(c). one part of the material may yield in compression more readily than others owing to some lack of uniformity in the material properties through out the strut.

In all the problems considered so far we have assumed that the deformation to be both progressive with increasing load and simple in form i.e. we assumed that a member in simple tension or compression becomes progressively longer or shorter but remains straight. Under some circumstances however, our assumptions of progressive and simple deformation may no longer hold good and the member become unstable. The term strut and column are widely used, often interchangeably in the context of buckling of slender members.]

At values of load below the buckling load a strut will be in stable equilibrium where the displacement caused by any lateral disturbance will be totally recovered when the disturbance is removed. At the buckling load the strut is said to be in a state of neutral equilibrium, and theoretically it should than be possible to gently deflect the strut into a simple sine wave provided that the amplitude of wave is kept small. Theoretically, it is possible for struts to achieve a condition of unstable equilibrium with loads exceeding the buckling load, any slight lateral disturbance then causing failure by buckling, this condition is never achieved in practice under static load conditions. Buckling occurs immediately at the point where the buckling load is reached, owing to the reasons stated earlier.

The resistance of any member to bending is determined by its flexural rigidity EI and is The quantity I may be written as $I = Ak^2$, Where I = area of moment of inertia A = area of the cross-section k = radius of gyration.

The load per unit area which the member can withstand is therefore related to k. There will be two principal moments of inertia, if the least of these is taken then the ratio

$$\frac{l}{k} \quad \text{i.e.} \quad \frac{\text{length of member}}{\text{least radius of gyration}}$$

Is called the slenderness ratio. It's numerical value indicates whether the member falls into the class of columns or struts.

Euler's Theory : The struts which fail by buckling can be analyzed by Euler's theory. In the following sections, different cases of the struts have been analyzed.

Case A: Strut with pinned ends:

Consider an axially loaded strut, shown below, and is subjected to an axial load 'P' this load 'P' produces a deflection 'y' at a distance 'x' from one end.

Assume that the ends are either pin jointed or rounded so that there is no moment at either end.

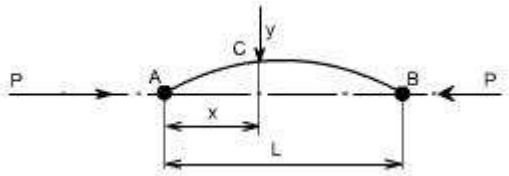

Assumption:

The strut is assumed to be initially straight, the end load being applied axially through centroid.

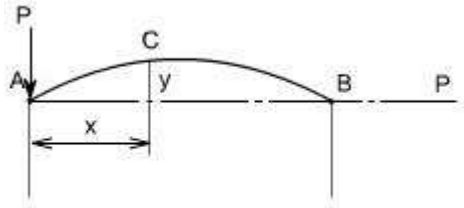

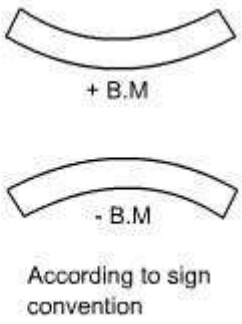

$$B.M|_C = -Py$$

Futher,we know that

$$EI\frac{d^2y}{dx^2} = M$$

$$EI\frac{d^2y}{dx^2} = -P.y = M$$

In this equation 'M' is not a function 'x'. Therefore this equation can not be integrated directly as has been done in the case of deflection of beams by integration method.

Thus,

$$EI\frac{d^2y}{dx^2} + Py = 0$$

Though this equation is in 'y' but we can't say at this stage where the deflection would be maximum or minimum.

So the above differential equation can be arranged in the following form $\frac{d^2y}{dx^2} + \frac{Py}{EI} = 0$

Let us define a operator

D = d/dx

$(D^2 + n^2)\, y = 0$ where $n^2 = P/EI$

This is a second order differential equation which has a solution of the form consisting of complimentary function and particular integral but for the time being we are interested in the complementary solution only[in this P.I = 0; since the R.H.S of Diff. equation = 0]

Thus $y = A\cos(nx) + B\sin(nx)$

Where A and B are some constants.

Therefore $y = A\cos\sqrt{\frac{P}{EI}}\,x + B\sin\sqrt{\frac{P}{EI}}\,x$

In order to evaluate the constants A and B let us apply the boundary conditions,

(i) at x = 0; y = 0

(ii) at x = L ; y = 0

Applying the first boundary condition yields A = 0.

Applying the second boundary condition gives

$$B\sin\left(L\sqrt{\frac{P}{EI}}\right)=0$$

Thus either $B=0$, or $\sin\left(L\sqrt{\frac{P}{EI}}\right)=0$

if B=0,that y0 for all values of x hence the strut has not buckled yet.Therefore,the solution required is

$$\sin\left(L\sqrt{\frac{P}{EI}}\right)=0 \text{ or } \left(L\sqrt{\frac{P}{EI}}\right)=\pi \text{ or } nL=\pi$$

$$\text{or } \sqrt{\frac{P}{EI}}=\frac{\pi}{L} \text{ or } P=\frac{\pi^2 EI}{L^2}$$

From the above relationship the least value of P which will cause the strut to buckle, and it is called the " **Euler Crippling Load** " $P_e$from which w obtain.

$$\boxed{P_e=\frac{\pi^2 EI}{L^2}}$$

It may be noted that the value of I used in this expression is the least moment of inertia

It should be noted that the other solutions exists for the equation

$$\sin\left(l\sqrt{\frac{P}{EI}}\right)=0 \qquad \text{i.e. } \sin nL=0$$

The interpretation of the above analysis is that for all the values of the load P, other than those which make sin nL = 0; the strut will remain perfectly straight since y = B sin nL = 0

For the particular value of

$$P_e=\frac{\pi^2 EI}{L^2}$$

$\sin nL=0$ or $nL=\pi$

Therefore $n=\frac{\pi}{L}$

Hence $y=B\sin nx=B\sin\frac{\pi x}{L}$

Then we say that the strut is in a state of neutral equilibrium, and theoretically any deflection which it suffers will be maintained. This is subjected to the limitation that 'L' remains sensibly constant and in practice slight increase in load at the critical value will cause the deflection to increase appreciably until the material fails by yielding. Further it should be noted that the deflection is not proportional to load, and this applies to all strut problems; like wise it will be found that the maximum stress is not proportional to load.

The solution chosen of nL = is just one particular solution; the solutions nL= 2 , 3 , 5 etc are equally valid mathematically and they do, infact, produce values of 'P_e' which

are equally valid for modes of buckling of strut different from that of a simple bow. Theoretically therefore, there are an infinite number of values of P_e , each corresponding with a different mode of buckling.

The value selected above is so called the fundamental mode value and is the lowest critical load producing the single bow buckling condition.

The solution nL = 2 produces buckling in two half – waves, 3 in three half-waves etc.

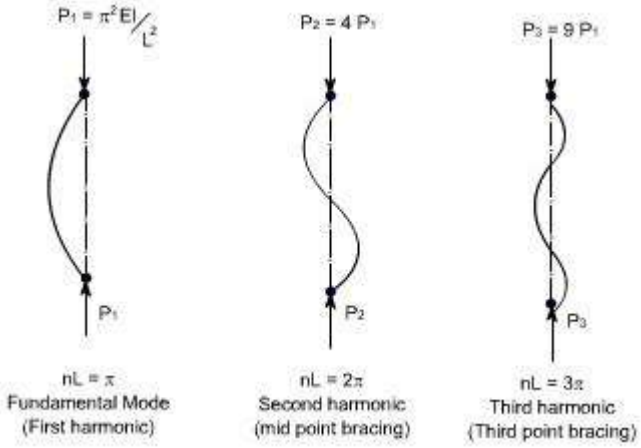

$$L\sqrt{\frac{P}{EI}} = \pi \quad \text{or} \quad P_1 = \frac{\pi^2 EI}{L^2}$$

$$\text{If } L\sqrt{\frac{P}{EI}} = 2\pi \text{ or } P_2 = \frac{4\pi^2 EI}{L^2} = 4P_1$$

$$\text{If } L\sqrt{\frac{P}{EI}} = 3\pi \text{ or } P_3 = \frac{9\pi^2 EI}{L^2} = 9P_1$$

If load is applied sufficiently quickly to the strut, then it is possible to pass through the fundamental mode and to achieve at least one of the other modes which are theoretically possible. In practical loading situations, however, this is rarely achieved since the high stress associated with the first critical condition generally ensures immediate collapse.

<u>struts and columns with other end conditions:</u> Let us consider the struts and columns having different end conditions

Case b: One end fixed and the other free:

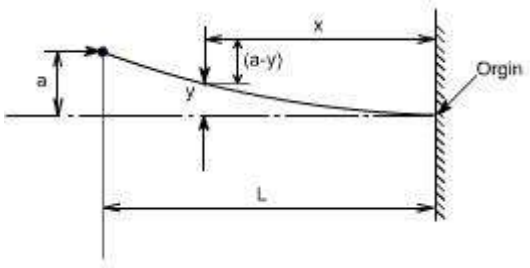

writing down the value of bending moment at the point C

B. $M|_c = P(a - y)$

Hence, the differential equation becomes,

$$EI\frac{d^2y}{dx^2} = P(a - y)$$

On rearranging we get

$$\frac{d^2y}{dx^2} + \frac{Py}{EI} = \frac{Pa}{EI}$$

Let $\frac{P}{EI} = n^2$

Hence in operator form, the differential equation reduces to $(D^2 + n^2) y = n^2a$ The solution of the above equation would consist of complementary solution and particular solution, therefore $y_{gen} = A \cos(nx) + \sin(nx) + P.I$ where

P.I = the P.I is a particular value of y which satisfies the differential equation

Hence $y_{P.I} = a$

Therefore the complete solution becomes

$Y = A \cos(nx) + B \sin(nx) + a$

Now imposing the boundary conditions to evaluate the constants A and B

(i) at x = 0; y = 0

This yields A = -a

(ii) at x = 0; dy/dx = 0

This yields B = 0

Hence y = a

cos(nx) + a

Futher, at x = L; y = a

Therefore a = - a cos(nx) + a or 0 = cos(nL)

Now the fundamental mode of buckling in this case would be

$$nL = \frac{\pi}{2}$$

$\sqrt{\frac{P}{EI}} L = \frac{\pi}{2}$, Therefore, the Euler's crippling load is given as

$$P_e = \frac{\pi^2 EI}{4L^2}$$

Case 3

Strut with fixed ends:

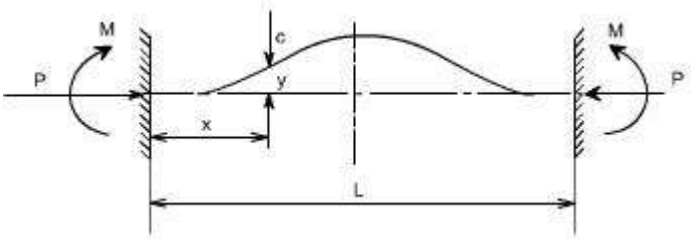

Due to the fixed end supports bending moment would also appears at the supports, since this is the property of the support. Bending Moment at point C = M – P.y

$$EI\frac{d^2y}{dx^2} = M - Py$$

$$\text{or } \frac{d^2y}{dx^2} + \frac{P}{EI} = \frac{M}{EI}$$

$n^2 = \frac{P}{EI}$, Therefore in the operator from, the equation reduces to

$$\left(D^2 + n^2\right)y = \frac{M}{EI}$$

$$y_{general} = y_{complementary} + y_{particular\ integral}$$

$$y|_{P.I} = \frac{M}{n^2EI} = \frac{M}{P}$$

Hence the general solution would be

$$y = B\,Cosnx + A\,Sinnx + \frac{M}{P}$$

Boundry conditions relevant to this case are at x=0:y=0

$$B = -\frac{M}{P}$$

Also at $x = 0; \frac{dy}{dx} = 0$ hence

A=0

Therefore,

$$y = -\frac{M}{P}\,Cos\,nx + \frac{M}{P}$$

$$y = \frac{M}{P}\,(1 - Cos\,nx)$$

Futher, it may be noted that at $x = L; y = 0$

$$\text{Then } 0 = \frac{M}{P}\,(1 - Cos\,nL)$$

Thus, either $\frac{M}{P} = 0$ or $(1 - Cos\,nL) = 0$

obviously, $(1 - Cos\,nL) = 0$

$cos\,nL = 1$

Hence the least solution would be

$nL = 2\pi$

$\sqrt{\frac{P}{EI}}\,L = 2\pi$, Thus, the buckling load or crippling load is

$$P_e = \frac{4\pi^2.EI}{L^2}$$

Thus,

Case 4

<u>One end fixed, the other pinned</u>

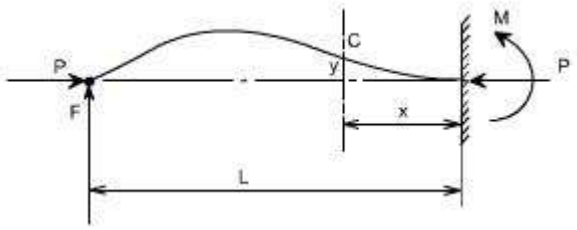

In order to maintain the pin-joint on the horizontal axis of the unloaded strut, it is necessary in this case to introduce a vertical load F at the pin. The moment of F about the built in end then balances the fixing moment.

With the origin at the built in end, the B,M at C is given as

$$EI\frac{d^2y}{dx^2} = -Py + F(L-x)$$

$$EI\frac{d^2y}{dx^2} + Py = F(L-x)$$

Hence

$$\frac{d^2y}{dx^2} + \frac{P}{EI}y = \frac{F}{EI}(L-x)$$

In the operator form the equation reduces to

$$\left(D^2 + n^2\right)y = \frac{F}{EI}(L-x)$$

$$y_{particular} = \frac{F}{n^2EI}(L-x) \text{ or } y = \frac{F}{P}(L-x)$$

The full solution is therefore

$$y = A\,Cos\,mx + B\,Sin\,nx + \frac{F}{P}(L-x)$$

The boundry conditions relevants to the problem are at x=0;y=0

$$\text{Hence } A = -\frac{FL}{P}$$

$$\text{Also at } x = 0; \frac{dy}{dx} = 0$$

$$\text{Hence } B = \frac{F}{nP}$$

$$\text{or } y = -\frac{FL}{P}Cos\,nx + \frac{F}{nP}Sin\,nx + \frac{F}{P}(L-x)$$

$$y = \frac{F}{nP}\left[Sin\,nx - nLCos\,nx + n(L-x)\right]$$

Also when x = L ; y = 0 Therefore

nL Cos nL = Sin nL or tan nL = nL

The lowest value of nL (neglecting zero) which satisfies this condition and which therefore produces the fundamental buckling condition is nL = 4.49radian

$$\text{or } \sqrt{\frac{P}{EI}}\, L = 4.49$$

$$\frac{P_e}{EI} L^2 = 20.2$$

$$P_e = \frac{2.05\pi^2\, EI}{L^2}$$

Equivalent Strut Length:

Having derived the results for the buckling load of a strut with pinned ends the Euler loads for other end conditions may all be written in the same form.

$$\text{i.e. } P_e = \frac{\pi^2 EI}{L^2}$$

Where L is the equivalent length of the strut and can be related to the actual length of the strut depending on the end conditions.

The equivalent length is found to be the length of a simple bow(half sine wave) in each of the strut deflection curves shown. The buckling load for each end condition shown is then readily obtained. The use of equivalent length is not restricted to the Euler's theory and it will be used in other derivations later.

The critical load for columns with other end conditions can be expressed in terms of the critical load for a hinged column, which is taken as a fundamental case.

For case(c) see the figure, the column or strut has inflection points at quarter points of its unsupported length. Since the bending moment is zero at a point of inflection, the freebody diagram would indicates that the middle half of the fixed ended is equivalent to a hinged column having an effective length $L_e = L / 2$.

The four different cases which we have considered so far are:

(a) Both ends pinned (c) One end fixed, other free

(b) Both ends fixed (d) One end fixed and other pinned

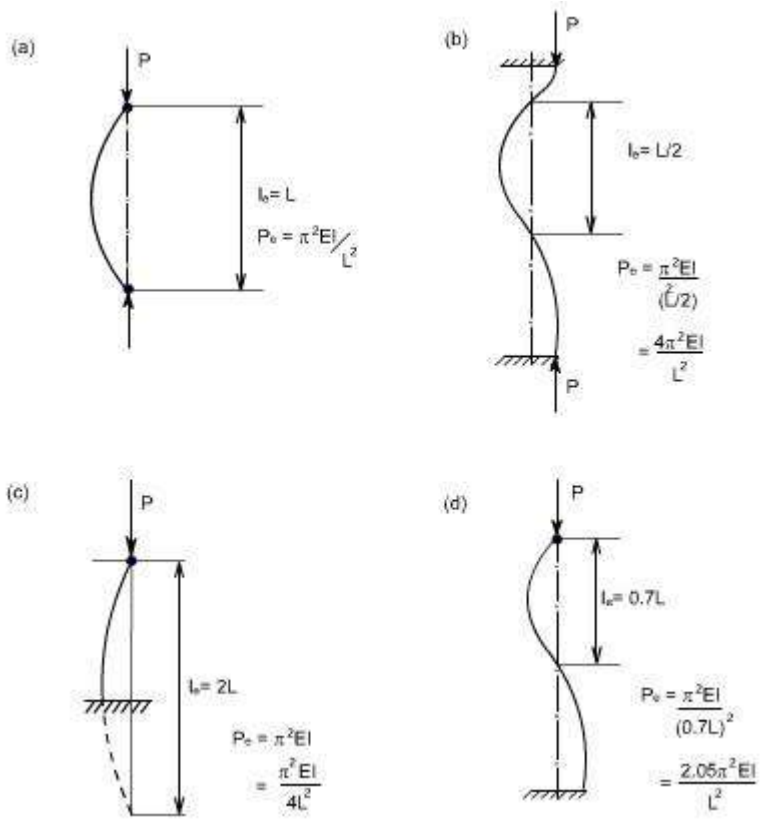

Limitations of Euler's Theory :

In practice the ideal conditions are never [i.e. the strut is initially straight and the end load being applied axially through centroid] reached. There is always some eccentricity and initial curvature present. These factors needs to be accommodated in the required formula's.

It is realized that, due to the above mentioned imperfections the strut will suffer a deflection which increases with load and consequently a bending moment is introduced which causes failure before the Euler's load is reached. Infact failure is by stress rather than by buckling and the deviation from the Euler value is more marked as the slenderness-ratio l/k is reduced. For values of l/k < 120 approx, the error in applying the Euler theory is too great to allow of its use. The stress to cause buckling from the Euler formula for the pin ended strut is

$$\text{Euler's stress, } \sigma_e = \frac{P_e}{A} = \frac{\pi^2 EI}{Al^2}$$

But, $I = Ak^2$

$$\sigma_e = \frac{\pi^2 E}{\left(\frac{l}{k}\right)^2}$$

A plot of $_e$ versus l / k ratio is shown by the curve ABC.

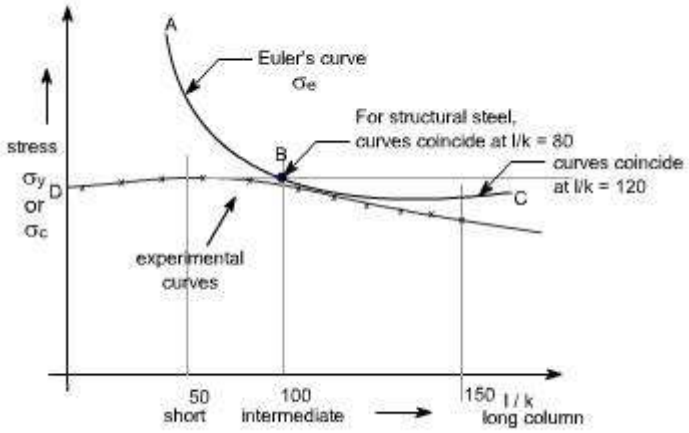

Allowing for the imperfections of loading and strut, actual values at failure must lie within and below line CBD.

Other formulae have therefore been derived to attempt to obtain closer agreement between the actual failing load and the predicted value in this particular range of slenderness ratio i.e.l/k=40 to l/k=100.

(a) Straight – line formulae :

The permissible load is given by the formulae

$P = \sigma_y A\left[1 - n\left(\frac{l}{k}\right)\right]$ Where the value of index ‘n' depends on the material used and the end conditions.

(b) Johnson parabolic formulae : The Johnson parabolic formulae is defined as

$P = \sigma_y A\left[1 - b\left(\frac{l}{k}\right)^2\right]$ where the value of index ‘b' depends on the end conditions.

(c) Rankine Gordon Formulae :

$$\frac{1}{P_R} = \frac{1}{P_e} + \frac{1}{P_c}$$

Where P_e = Euler crippling load

P_c = Crushing load or Yield point load in Compression

P_R = Actual load to cause failure or Rankine load

Since the Rankine formulae is a combination of the Euler and crushing load for a strut.

$$\frac{1}{P_R} = \frac{1}{P_e} + \frac{1}{P_c}$$

For a very short strut P_e is very large hence 1/ $P_e$would be large so that 1/ $P_e$can be neglected.

Thus $P_R = P_c$, for very large struts, P_e is very small so 1/ P_e would be large and 1/ $P_c$can be neglected ,hence $P_R = P_e$

The Rankine formulae is therefore valid for extreme values of 1/k.It is also found to be fairly accurate for the intermediate values in the range under consideration. Thus rewriting the formula in terms of stresses, we have

$$\frac{1}{\sigma A} = \frac{1}{\sigma_e A} + \frac{1}{\sigma_y A}$$

$$\frac{1}{\sigma} = \frac{1}{\sigma_e} + \frac{1}{\sigma_y}$$

$$\frac{1}{\sigma} = \frac{\sigma_e + \sigma_y}{\sigma_e . \sigma_y}$$

$$\sigma = \frac{\sigma_e . \sigma_y}{\sigma_e + \sigma_y} = \frac{\sigma_y}{1 + \frac{\sigma_y}{\sigma_e}}$$

For struts with both end spinned

$$\sigma_e = \frac{\pi^2 E}{\left(\frac{l}{k}\right)^2}$$

$$\sigma = \frac{\sigma_y}{1 + \frac{\sigma_y}{\pi^2 E}\left(\frac{l}{k}\right)^2}$$

$$\sigma = \frac{\sigma_y}{1 + a\left(\frac{l}{k}\right)^2}$$

Where $a = \frac{\sigma_y}{\pi^2 E l}$ and the value of ‘a' is found by conducting experiments on various materials. Theoretically, but having a value normally found by experiment for various materials. This will take into account other types of end conditions.